Control, Isolation and
Safety transformers

www.eaton.eu

Transformers
Flexible and Reliable

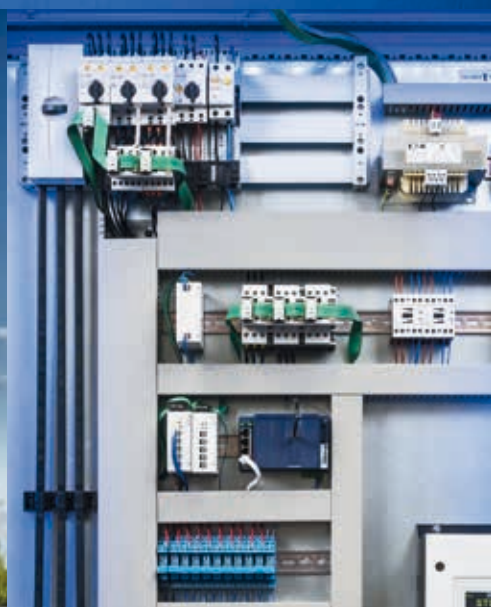

EATON
Powering Business Worldwide

The right winding for every application

Control, Isolation and Safety transformers
Multi-winding transformers

Eaton offers a wide range of control transformers. All transformers are designed and tested according to the requirements of the IEC/EN 61558. This means that, depending on the specific type, they can be used in accordance with international installation standard IEC/EN 60204.

We also offer matching, matching transformer and power transformer transformers upon request.

Additionally, Eaton offers a vast selection of transformers approved for machine and system exports to north america.

Besides their use for voltage adjustment, transformers can also be used to change network configuration.

Information relevant for export to North America

Product Standards	UL 506; UL5085-1; UL 5085-2; CSA-C22.2 No. 66; CSA-C22.2 No. 66.1-06; CSA-C22.2 No. 66.2-06; IEC/EN 61558-2-2; CE marking
UL File No.	E167225 XPTQ2,
ULCCN	XPTQ8
CSA File No.	UL report applies to both US and Canada
CSA Class No.	–
NA Certification	UL Recognized, certified by UL for use in
Suitablefor	Canada Branchcircuits
Max. Voltage Rating	600 V AC
Degree of Protection	IEC: IP00, UL/CSA Type: –

Transformers: Easy to use, reliable in performance.

All Eaton transformers apply to the IEC 85 and IEC 216 according to insulation class B. This ensures a highly reliable operation temperature of 130°C. Additionally, all our transformers are compliant to IP00 degree of protection and an ambient air temperature of -25° to +40°C without derating.

A resin impregnation avoids corrosion to the transformers, improves heat emission and notably reduces humming. Eaton offers a tropical protection lacquer for challenging application areas, which provides additional protection from humidity and corrosion.

Control transformers STN

Our single purpose STN control transformers provide a reliable operational voltage for control and auxiliary circuits at any time.

Due to the easy commissioning and construction according to IEC/EN 61558-2-2, VDE 0570-2-, UL 5085-2 and CSA 22.2 No. 66, the STN control transformers are extremely reliable and grant maximum security to equipment and systems.

Control, isolating and safety transformers STI, STZ, DTZ

The control, isolation and safety transformers STI, STZ and DTZ are built and audited according to IEC/EN 61558-2-2/2-4/2-6, UL 5085-2 and CSA 22.2 No. 66 norms.

The transformer reduces the effects of shortcircuits and guarantees safe electrical disconnection in case of failure.

Typical areas of application are among others actuating circuit, protective separation, PELV-circuit (protective small voltage) and FELV-circuit (functionallow voltage).

Single-phase control, isolation and safety transformer

Three-phase control, isolation and safety transformer

Multi-winding transformers UTI

Eaton's multi-winding transformers are the most adaptive ones of their kind and thanks to their substantial approvals optimal for worldwide application.

Multi-winding transformers are a combination of resistance in a single device. Transformers are built and tested in compliance with IEC/ EN 61558-2-2/2-4/2-6, UL 5085-2 and CSA 22.2 No. 66 norms.

Single-phase control transformer

Single-phase multi-winding transformer

	Single-phase transformers				Three-phase transformers
	STN	STZ	STI	UTI	DTZ
Control transformer	X	X	X	X	X
Isolating transformer	-	X	X	X	X
Safety transformer	-	X	X	X	X
Multi-winding transformer	-	-	-	X	-
Preferred voltages	X	-	X	-	-
Selectable Voltages	X	X	-	-	X
Equipment*					
Housing IP23	-	X	-	-	X
Screen winding	-	X	-	-	X
Inrush current limiters	-	X	X	-	-
Additional tappings	-	X	-	-	X
Additional windings					
Secondary side	-	X	-	-	-
Primary side	-	Please enquire	-	-	-
Approvals					
UL/CSA	up to 4kVA	up to 4kVA	up to 4kVA	X	up to 6,3kVA
DNV & Germanische Lloyd	Please enquire	Please enquire	Please enquire	Please enquire	Please enquire

* Accessories available at www.eaton.eu

Single-phase control transformers with preferred voltages STN– Never compromising security

IEC/EN 61558-2-2
VDE 0570 Teil 2-2
Rated input voltage
230 ± 5 % V,
400 ± 5 % V
Rated output voltage
24 V, 230 V

Rated power	Short-time rating	Preferred voltage 400/230V		Preferred voltage 400/24V		Preferred voltage 230/24V	
kVA	kVA	Type	Article no.	Type	Article no.	Type	Article no.
0.06	0.095	**STN0,06(400/230)**	204936	**STN0,06(400/24)**	204937	**STN0,06(230/24)**	204935
0.1	0.16	**STN0,1(400/230)**	204942	**STN0,1(400/24)**	204943	**STN0,1(230/24)**	204941
0.16	0.32	**STN0,16(400/230)**	204948	**STN0,16(400/24)**	204949	**STN0,16(230/24)**	204947
0.2	0.38	**STN0,2(400/230)**	204977	**STN0,2(400/24)**	204978	**STN0,2(230/24)**	204976
0.25	0.44	**STN0,25(400/230)**	204980	**STN0,25(400/24)**	221509	**STN0,25(230/24)**	221508
0.315	0.6	**STN0,315(400/230)**	204982	**STN0,315(400/24)**	221511	**STN0,315(230/24)**	221510
0.4	0.62	**STN0,4(400/230)**	204984	**STN0,4(400/24)**	221514	**STN0,4(230/24)**	221513
0.5	0.88	**STN0,5(400/230)**	204986	**STN0,5(400/24)**	221516	**STN0,5(230/24)**	221515
0.63	1.51	**STN0,63(400/230)**	204988	**STN0,63(400/24)**	221518	**STN0,63(230/24)**	221517
0.8	2.25	**STN0,8(400/230)**	204990	**STN0,8(400/24)**	221520	**STN0,8(230/24)**	221519
1	3.28	**STN1,0(400/230)**	204992	**STN1,0(400/24)**	221522	**STN1,0(230/24)**	221521
1.3	4.8	**STN1,3(400/230)**	221523				
1.6	3.98	**STN1,6(400/230)**	221524				
2	5.75	**STN2,0(400/230)**	221525				
2.5	7.24	**STN2,5(400/230)**	221526				
3	8.36	**STN3,0(400/230)**	221527				
4	12.2	**STN4,0(400/230)**	221528				

Just select - for example your voltage

Single-phase control transformer with selectable voltage

IEC/EN 61558-2-2
VDE 0570 Teil 2-2
Rated input voltage 100 – 690 ± 5 % V,
Rated output voltage 12 – 250 V

Rated power	Short-time rating		
kVA	kVA	Type	Article no.
0.06	0.095	**STN0,06(*/*)**	204938
0.1	0.16	**STN0,1(*/*)**	204939
0.16	0.32	**STN0,16(*/*)**	204944
0.2	0.38	**STN0,2(*/*)**	204950
0.25	0.44	**STN0,25(*/*)**	204979
0.315	0.6	**STN0,315(*/*)**	204981
0.4	0.62	**STN0,4(*/*)**	204983
0.5	0.88	**STN0,5(*/*)**	204985
0.63	1.51	**STN0,63(*/*)**	204987
0.8	2.25	**STN0,8(*/*)**	204989
1	3.28	**STN1,0(*/*)**	204991
1.3	4.8	**STN1,3(*/*)**	204993
1.6	3.98	**STN1,6(*/*)**	204994
2	5.75	**STN2,0(*/*)**	204995
2.5	7.24	**STN2,5(*/*)**	204996
3	8.36	**STN3,0(*/*)**	204997
4	12.2	**STN4,0(*/*)**	204998

Ordering example

When ordering, the type reference must include the following details:

STN0, 1(*/*)

1. Wildcard *= Rated input voltage
2. Wildcard *= Rated output voltage
   - Desired type STN0, 1
   - Desired rated input voltage 200 V
   - Desired rated output voltage 18,5 V

The correct type is

STN0,1(200/18,5)

Dimension
Single-phase control transformer

STN0,6...2,0

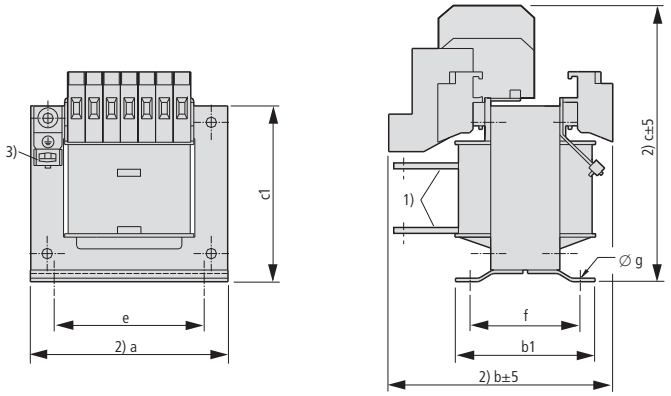

① Connection lugs
② Maximum space requirement
③ with STN00,6...2,0 ground connection at bottom

Type	Total Weight	Off-load losses	Short-circuit voltage	Short-circuit voltage	Efficiency	a	b	c	b	c	b	c	b	c	b	c	e	f	Ø g	b1	c1
	kg	W	W	V	%		12V		24V		42V		110V		230V						
STN0,06	1	7	10	11	0.79	66	79	78	79	78	79	78	79	78	79	78	50	56	4.8x8	67	60
STN0,1	1.5	7	15	10	0.84	85	75	91	75	91	75	91	75	91	75	91	64	47	4.8x8	60	76
STN0,16	2.4	11	16	6.7	0.87	85	97	91	97	91	97	91	97	91	97	91	64	70	4.8x8	83	76
STN0,2	2.8	9	19	6.8	0.88	106	83	112	83	112	83	112	83	112	83	112	80	61	5.8x9	80	97
STN0,25	2.9	9	21	6.3	0.9	106	103	121	83	112	83	112	83	112	83	112	80	61	5.8x9	80	97
STN0,315	3.5	11	21	5.3	0.91	106	111	121	91	112	91	112	91	112	91	112	80	70	5.8x9	89	97
STN0,4	4.2	12	27	5.3	0.92	121	108	133	88	124	88	124	88	124	88	124	90	68	5.8x12	86	106
STN0,5	5.1	15	27	4.1	0.93	121	120	133	120	133	100	124	100	124	100	124	90	80	5.8x12	98	106
STN0,63	7.1	21	32	3.8	0.93	151	121	157	121	157	107	145	107	145	107	145	122	82	7x15	104	132
STN0,8	9.8	24	24	2.5	0.94	151	124	196	138	157	124	145	124	145	124	145	122	99	7x15	121	132
STN1,0	12.4	33	26	2.2	0.94	151	150	196	164	157	164	157	150	145	150	145	122	125	7x15	147	132
STN1,3	14.1	46	33	2.1	0.94	175	138	213	148	169	148	169	138	157	138	157	135	110	7x15	135	152
STN1,6	14.3	43	44	2.5	0.95	175	183	170	138	216	148	169	138	157	138	157	135	110	7x15	135	152
STN2,0	19.9	56	42	2	0.95	175	213	170	168	216	178	169	168	157	168	157	135	141	7x15	165	152

Measurements in mm

STN2,5...4,0

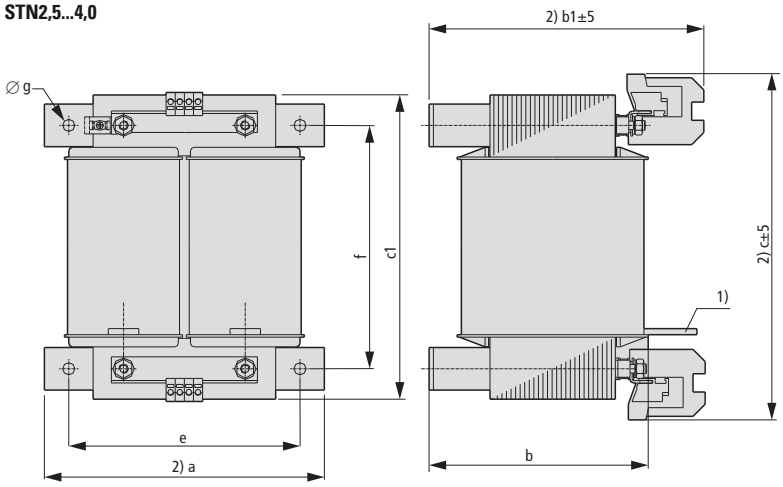

① Connection lugs
② Maximum space requirement

Type	Total Weight	Off-load losses	Short-circuit losses	Short-circuit voltage	Efficiency	a	b	c1	e	f	Ø g	12V	12V	24V	24V	42V	42V	110V	110V	230V	230V
	kg	W	W	V	%							b1	c	b1	c	b1	c	b1	c	b1	c
STN2,5	20	21	145	2.4	0.95	230	130	250	190	200	11	185	260	185	250	205	255	160	275	145	255
STN3,0	23	32	94	2.4	0.95	230	155	250	190	200	11	210	260	230	250	230	255	185	275	170	255
STN4,0	27	28	143	2.4	0.95	230	170	250	190	200	11	225	260	245	250	245	255	200	275	185	255

Measurements in mm

Single-phase control. isolation and safety transformers STZ

IEC/EN 61558-2-2/2-4/2-6
VDE 0570 Part 2-2,
Part 2-6 (Safety transformers),
Part 2-4 (Isolating transformers)
Rated input voltage 50 – 950 ± 5 % V,
Rated output voltage 12 – 1000 V

Rated power kVA	Short-time rating kVA	Type	Article no.
0.06	0.13	**STZ0,1(*/*)**	914761
0.1	0.24	**STZ0,1(*/*)**	914762
0.16	0.36	**STZ0,25(*/*)**	914763
0.2	0.44	**STZ0,2(*/*)**	914764
0.25	0.6	**STZ0,25(*/*)**	914765
0.315	0.75	**STZ0,315(*/*)**	914766
0.4	1.1	**STZ0,4(*/*)**	914767
0.5	1.6	**STZ0,5(*/*)**	914768
0.63	1.7	**STZ0,63(*/*)**	914769
0.8	2	**STZ0,8(*/*)**	914770
1	2.8	**STZ1,0(*/*)**	914771
1.3	3.7	**STZ1,3(*/*)**	914772
8	5.5	**STZ8,0(*/*)**	914773
2	7	**STZ2,0(*/*)**	914774
2.5	9	**STZ2,5(*/*)**	914775
3	11.5	**STZ3(*/*)**	914776
4	15	**STZ4,0(*/*)**	914777
5.3	13	**STZ5,3(*/*)**	201060
8.3	21	**STZ8,3(*/*)**	201062
13.3	34	**STZ13,3(*/*)**	201064

Ordering example

When ordering, the type reference must include the following details:

STZ0,06(*/*)

1. Wildcard *= Rated input voltage
2. Wildcard *= Rated output voltage
   - desired type STZ0,06
   - desired rated input voltage
   - desired rated output voltage

The correct type is

STZ0,06(230/12)

Attention!
Preferred voltage 400/230 V, 400/24 V, 230/230 V, 230/24 V. 230/24 V are delivered as STI only, if there were no additional options in the order, e.g. shielding winding.

Three-phase control, isolating and safety transformers DTZ

IEC/EN 61558-2-2/2-4/2-6
VDE 0570 Part 2-2,
Part 2-6 (Safety transformers),
Part 2-4 (Isolating transformer)
Rated input voltage 50 – 950 ± 5 % V,
Rated output voltage 18.5 – 1000 V

Rated power kVA	Short-time rating kVA	Type	Article no.
0.1	0.2	**DTZ0,1(*/*)***	914799
0.16	0.32	**DTZ0,16(*/*)***	914800
0.25	0.5	**DTZ0,25(*/*)***	914801
0.4	0.8	**DTZ0,4(*/*)***	914802
0.5	1	**DTZ0,5(*/*)***	914803
0.63	1.38	**DTZ0,63(*/*)***	914804
1	2.2	**DTZ1,0(*/*)***	914805
1.6	3.5	**DTZ1,6(*/*)***	914806
2	4.4	**DTZ2,0(*/*)***	914807
2.5	5.5	**DTZ2,5(*/*)***	914808
4	6.2	**DTZ4,0(*/*)***	914809
6.3	15.7	**DTZ6,3(*/*)***	914810
8	20	**DTZ8,0(*/*)***	914811
10	25	**DTZ10(*/*)***	914812
12.5	31	**DTZ12,5(*/*)***	914813
16	40	**DTZ16(*/*)***	914814
20	50	**DTZ20(*/*)***	914815
25	62	**DTZ25(*/*)***	914816

Ordering example

When ordering, the type reference must include the following details:

DTZ0,1(*/*)

1. Wildcard *= Rated input voltage
2. Wildcard *= Rated output voltage
   - desired type DTZ0.1
   - desired rated input voltage
   - desired rated output voltage

The correct type is

DTZ0,1(200/18,5)DY(N)5)

Dimension
Single-phase control-isolation-/safety transformers STZ

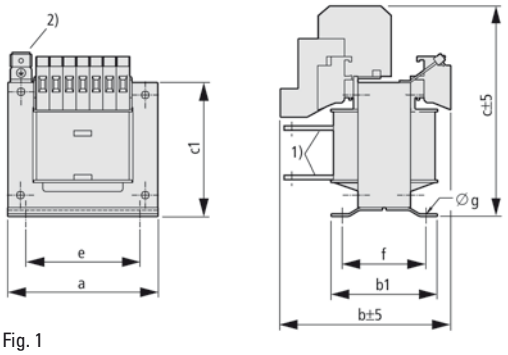

Fig. 1

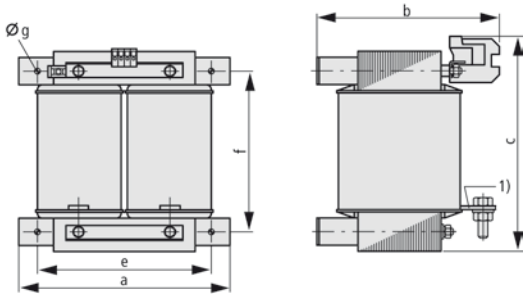

Fig. 2

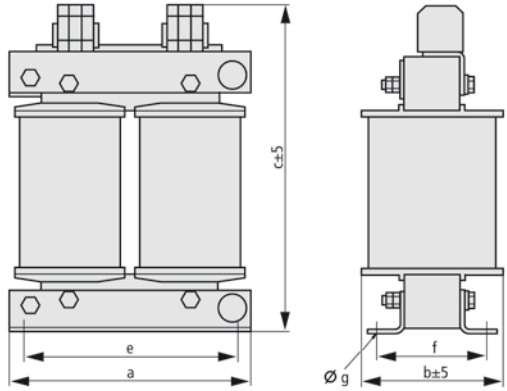

Fig. 3

[1] Connection lugs
[2] Types STI/STZ 0,06 - 0,16 earth connection at bottom

Type	Total Weight	Off-load losses	Short-circuit losses[1]	Short-circuit voltage	Efficiency	a	b	c	b	c	b	c	b	c	b	c	e	f	Ø g	b1	c1
	kg	W	W	V	%		12V		24V		42V		110V		230V						
Fig. 1																					
STZ0,06	1.5	6	5	7.8	0.85	85	75	91	75	91	75	91	75	91	75	91	64	47	4.8 x 8	60	76
STZ0,1	2	7	8	6.9	0.87	85	89	91	89	91	89	91	89	91	89	91	64	61	4.8 x 8	74	76
STZ0,16	2.3	9	12	6.6	0.88	85	97	91	97	91	97	91	97	91	97	91	64	70	4.8 x 8	83	76
STZ0,2	3	11	17	6.6	0.88	106	83	112	83	112	83	112	83	112	83	112	80	61	5.8 x 9	80	97
STZ0,25	3.8	13	14	5.1	0.9	106	111	124	91	112	91	112	91	112	91	112	80	70	5.8 x 9	89	97
STZ0,315	4.3	10	18	5.5	0.92	121	–	–	88	119	88	119	88	119	88	119	90	68	5.8 x 12	86	106
STZ0,4	5.2	17	18	4.4	0.92	121	–	–	100	119	100	119	100	119	100	119	90	80	5.8 x 12	98	106
STZ0,5	6.8	15	24	3.9	0.93	121	–	–	140	131	120	119	120	119	120	119	90	100	5.8 x 12	118	106
STZ0,63	7.7	15	27	4.1	0.94	151	–	–	121	157	107	145	107	145	107	145	122	82	7 x 15	104	132
STZ0,8	9.6	17	25	3.2	0.95	151	–	–	138	157	124	145	124	145	124	145	122	99	7 x 15	121	132
STZ1,0	13.4	27	29	2.9	0.95	151	–	–	164	157	164	157	150	145	150	145	122	125	7 x 15	147	132
STZ1,3	14.9	32	35	3	0.95	175	–	–	148	169	148	169	138	157	138	157	135	110	7 x 15	135	152
STZ1,6	17.4	21	37	2.4	0.96	195	–	–	142	240	149	186	142	174	142	174	150	110	10 x 18	140	166
STZ2,0	21.5	27	33	2	0.97	195	–	–	154	240	161	186	154	174	154	174	150	122	10 x 18	152	166
STZ2,5	21.5	39	43	2.4	0.97	195	–	–	154	240	154	240	161	186	154	174	150	122	10 x 18	152	166
Fig. 2																					
STZ3,0	26	30	55	2.1	0,97	230	–	–	210	250	230	255	185	275	170	255	190	200	11	–	–
STZ4,0	32	38	88	2.2	0,97	230	–	–	235	250	255	255	210	275	200	255	190	200	11	–	–
Fig. 3																					
STZ5,3	40	40	165	4	0.96	260	200	*)	200	*)	200	*)	214	374	214	360	230	126	10 x 18	–	–
STZ8,3	55	65	200	4	0.97	260	–	–	230	*)	230	*)	244	374	244	374	230	156	10 x 18	–	–
STZ13,3	80	95	265	3.5	0.97	320	–	–	240	*)	240	*)	270	440	270	440	270	172	13 x 20	–	–

*)The higher rated operating voltage applies, Measurements in mm 1) Values during average room temperature

Dimension
Three-phase control-isolation/safety transformers DTZ

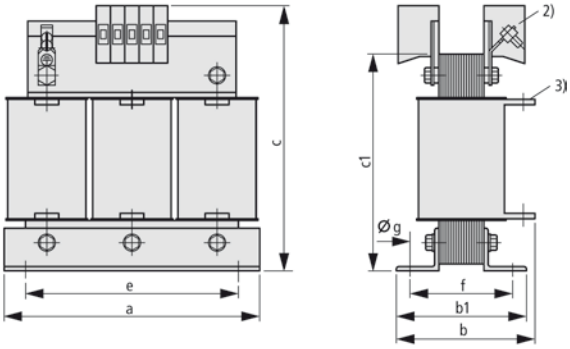

[1] The higher rated operating voltage applies
[2] Terminals < 25 A
[3] Connection lugs > 63 A

Type	Total Weight	Off-load losses	Short-circuit losses	Short-circuit voltage	Efficiency	a	b	c	b	c	b	c	b	c	b	c	e	f	Ø g	b1	c1
	kg	W	W	%			18,5V		24V		42V		110V		230V						
DTZ0,1	1.9	5	28	15	0.75	125	65	134	65	134	65	134	65	134	65	134	100	45	5 x 8	61	102
DTZ0,16	2.5	8	20	9.5	0.85	125	75	134	75	134	75	134	75	134	75	134	100	55	5 x 8	71	102
DTZ0,25	3.6	11	25	8.5	0.88	155	77	154	77	154	77	154	77	154	77	154	130	57	8 x 12	77	128
DTZ0,4	5.1	15	40	8	0.88	155	92	154	92	154	92	154	92	154	92	154	130	72	8 x 12	92	128
DTZ0,5	6.1	20	35	6	0.9	190	82	180	112	191	82	180	82	180	82	180	170	58	8 x 12	82	155
DTZ0,63	8.9	25	50	5.5	0.9	190	102	180	132	191	102	180	102	180	102	180	170	78	8 x 12	102	155
DTZ1,0	12.9	35	50	4	0.92	210	137	210	137	210	137	210	117	199	117	199	175	97	8 x 12	117	174
DTZ1,6	18.5	55	60	3	0.93	230	144	234	114	269	144	234	114	223	114	223	176	95	7 x 13	114	198
DTZ2,0	22.4	60	75	3.5	0.94	240	117	279	117	279	117	279	141	244	117	233	185	95	10 x 18	117	208
DTZ2,5	29.3	80	85	2.5	0.94	265	132	299	132	299	132	299	152	264	132	253	200	102	10 x 18	132	228
DTZ4,0	39.6	60	100	2	0.96	300	166	317	166	333	147	333	157	296	157	296	224	119	10 x 18	147	260
DTZ6,3	50.2	66	170	2	0.96	300	193	285	210	285	193	333	173	333	173	296	224	145	10 x 18	173	260
DTZ8,0	55	60	250	4	0.96	390	200	1)	200	1)	200	1)	184	374	184	374	350	126	10 x 18	152	310
DTZ10,0	70	80	280	3.5	0.97	390	–	–	216	1)	216	1)	199	374	199	374	350	141	10 x 18	167	310
DTZ12,5	80	95	300	4	0.97	390	–	–	231	1)	231	1)	214	374	214	374	350	156	10 x 18	182	310
DTZ16	95	100	420	4.5	0.97	450	–	–	221	1)	221	1)	204	434	204	434	400	142	13 x 20	172	360
DTZ20	125	140	400	3.5	0.98	450	–	–	251	1)	251	1)	234	1)	234	434	400	172	13 x 20	202	360
DTZ25	160	180	350	3	0.98	450	–	–	281	1)	281	1)	264	1)	264	434	400	202	13 x 20	232	360

Measurements in mm

Single-phase control, isolation and safety transformers STI - The muscle for your mains supplies

IEC/EN 61558-2-2/2-4/2-6
VDE 0570 Part 2-2,
Part 2-6 (Safety transformers),
Part 2-4 (isolating transformer)
Rated input voltage
230 ± 5 % V, 400 ± 5 % V
Rated output voltage 24, 230 V

Rated power	Short-time rating	Preferred voltage 400/230V		Preferred voltage 400/24V		Preferred voltage 230/230V		Preferred voltage 230/24V	
kVA	kVA	Type	Article no.	Type	Article no.	Type	Article no.	Type	Article no.
0.06	0.13	**STI0,06(400/230)**	029975	**STI0,06(400/24)**	029971	**STI0,06(230/230)**	029968	**STI0,06(230/24)**	029977
0.1	0.24	**STI0,1(400/230)**	046630	**STI0,1(400/24)**	046631	**STI0,1(230/230)**	029976	**STI0,1(230/24)**	046629
0.16	0.36	**STI0,16(400/230)**	046633	**STI0,16(400/24)**	046634	**STI0,16(230/230)**	035247	**STI0,16(230/24)**	046632
0.2	0.44	**STI0,2(400/230)**	046636	**STII0,2(400/24)**	046637	**STI0,2(230/230)**	035248	**STI0,2(230/24)**	046635
0.25	0.6	**STI0,25(400/230)**	046638	**STI0,25(400/24)**	035249	**STI0,25(230/230)**	036400	**STI0,25(230/24)**	035262
0.315	0.75	**STI0,315(400/230)**	046639	**STI0,315(400/24)**	035250	**STI0,315(230/230)**	040641	**STI0,315(230/24)**	036292
0.4	1.1	**STI0,4(400/230)**	046640	**STI0,4(400/24)**	035251	**STI0,4(230/230)**	040642	**STI0,4(230/24)**	036393
0.5	1.6	**STI0,5(400/230)**	046641	**STI0,5(400/24)**	035252	**STI0,5(230/230)**	040643	**STI0,5(230/24)**	036394
0.63	1.7	**STI0,63(400/230)**	046883	**STI0,63(400/24)**	035253	**STI0,63(230/230)**	040644	**STI0,63(230/24)**	036395
0.8	2	**STI0,8(400/230)**	046889	**STI0,8(400/24)**	035254	**STI0,8(230/230)**	046641	**STI0,8(230/24)**	036396
1	2.8	**STI1,0(400/230)**	046895	**STI1,0(400/24)**	035255	**STI1,0(230/230)**	026642	**STI1,0(230/24)**	036397
1.3	3.7	**STI1,3(400/230)**	046918			**STI1,3(230/230)**	025256		
1.6	5.5	**STI1,6(400/230)**	046952			**STI1,6(230/230)**	035257		
2	7	**STI2,0(400/230)**	035258			**STI2,0(230/230)**	036398		
2.5	9	**STI2,5(400/230)**	035259			**STI2,5(230/230)**	036399		
3	11.5	**STI3,0(400/230)**	035260						
4	15	**STI4,0(400/230)**	035261						

Dimension
Single-phase control-isolation-/safety transformers STI

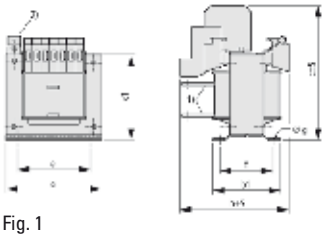

Fig. 1

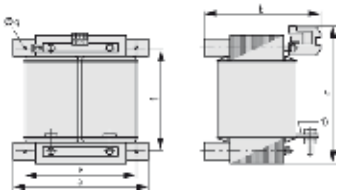

Fig. 2

[1] Connection lugs
[2] Types STI/STZ 0,06 - 0,16 earth connection at bottom

Type	Total Weight	Off-load losses	Short-circuit losses[1]	Short-circuit voltage	Efficiency	a	b	c	b	c	b	c	b	c	b	c	e	f	ø g	b1	c1
	kg	W	W	%			12V		24V		42V		110V		230V						
Fig. 1																					
STI0,06	1,5	6	5	7.8	0.85	85	75	91	75	91	75	91	75	91	75	91	64	47	4.8 x 8	60	76
STI0,1	2	7	8	6.9	0.87	85	89	91	89	91	89	91	89	91	89	91	64	61	4.8 x 8	74	76
STI0,16	2.3	9	12	6.6	0.88	85	97	91	97	91	97	91	97	91	97	91	64	70	4.8 x 8	83	76
STI0,2	3	11	17	6.6	0.88	106	83	112	83	112	83	112	83	112	83	112	80	61	5.8 x 9	80	97
STI0,25	3.8	13	14	5.1	0.9	106	111	124	91	112	91	112	91	112	91	112	80	70	5.8 x 9	89	97
STI0,315	4.3	10	18	5.5	0.92	121	–	–	88	119	88	119	88	119	88	119	90	68	5.8 x 12	86	106
STI0,4	5.2	17	18	4.4	0.92	121	–	–	100	119	100	119	100	119	100	119	90	80	5.8 x 12	98	106
STI0,5	6.8	15	24	3.9	0.93	121	–	–	140	131	120	119	120	119	120	119	90	100	5.8 x 12	118	106
STI0,63	7.7	15	27	4.1	0.94	151	–	–	121	157	107	145	107	145	107	145	122	82	7 x 15	104	132
STI0,8	9.6	17	25	3.2	0.95	151	–	–	138	157	124	145	124	145	124	145	122	99	7 x 15	121	132
STI1,0	13.4	27	29	2.9	0.95	151	–	–	164	157	164	157	150	145	150	145	122	125	7 x 15	147	132
STI1,3	14.9	32	35	3	0.95	175	–	–	148	169	148	169	138	157	138	157	135	110	7 x 15	135	152
STI1,6	17.4	21	37	2.4	0.96	195	–	–	142	240	149	186	142	174	142	174	150	110	10 x 18	140	166
STI2,0	21.5	27	33	2	0.97	195	–	–	154	240	161	186	154	174	154	174	150	122	10 x 18	152	166
STI2,5	21.5	39	43	2.4	0.97	195	–	–	154	240	154	240	161	186	154	174	150	122	10 x 18	152	166
Fig. 2																					
STI3,0	26	30	55	2.1	0.97	230	–	–	210	250	230	255	185	275	170	255	190	200	11	–	–
STI4,0	35	38	88	2.2	0.97	230	–	–	235	250	255	255	210	275	200	255	190	200	11	–	–

[1] Values during average room temperature, Measurements in mm

Single-phase multi-winding transformer
UTI - The master of flexibilty

	Rated power	Rated input voltage	Rated output voltage	Type	Article no.
	kVA	V	V		
Single-phase multi-winding transformer					
	0.1	208 230	2 x 115	**UTI0,1-115**	206923
	0.2	380 400 415		**UTI,02-115**	206924
	0.315	440 460		**UTI0,315-115**	206925
	0.5	480 500		**UTI0,5-115**	206926
(Universal) control, isolation and safety transformers according to VDE 0550, IEC/EN 61558-2-2/2-4/2-6 VDE 0570 Part 2-2, Part 2-6 (Safety transformer), Part 2-4 (Isolation transformer)	0.63	525 550		**UTI0,63-115**	206927
	0.8	575 600		**UTI0,8-115**	206928
	1			**UTI1,0-115**	206929

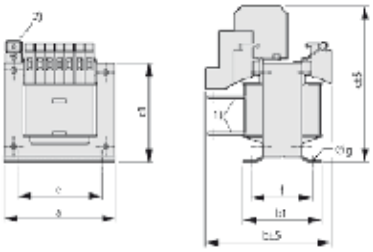

[1] Maximum space requirement
[2] With Type UTI1,1 earth connection at bottom

Type	Total weight	Off-load losses	Load losses	Short-circuit voltage	Efficiency	a	b1	c1	b	c	b	c	e	f	ø g
	kg	W	W	%					U = 24V		U = 115V				
UTI0,1	2	8	11	7.5	0.84	85	74	76	89	93	89	93	64	61	4.8 x 8
UTI0,2	3	10	19	6.5	0.87	106	80	97	82	112	82	112	80	61	5.8 x 9
UTI0,315	4.3	15	23	5	0.89	121	86	106	88	124	88	124	90	68	5.8 x 12
UTI0,5	6.8	26	23	3.5	0.92	121	118	106	140	133	120	124	90	100	5.8 x 12
UTI0,63	7.7	25	32	3.8	0.92	151	104	132	122	159	107	150	122	82	7 x 15
UTI0,8	9.6	33	29	2.8	0.93	151	121	132	139	159	124	150	122	99	7 x 15
UTI1,0	13.4	46	30	2.1	0.93	151	147	132	165	159	150	150	122	125	7 x 15

Measurements in mm

Common configurations for three-phase transformers

Through different configurations of the the primary and secondary winding (star, delta or inter-star) many possible combinations become available, which can be selected by purpose. These are collected as configurations according to EN60076-1.

Additional switching groups on request

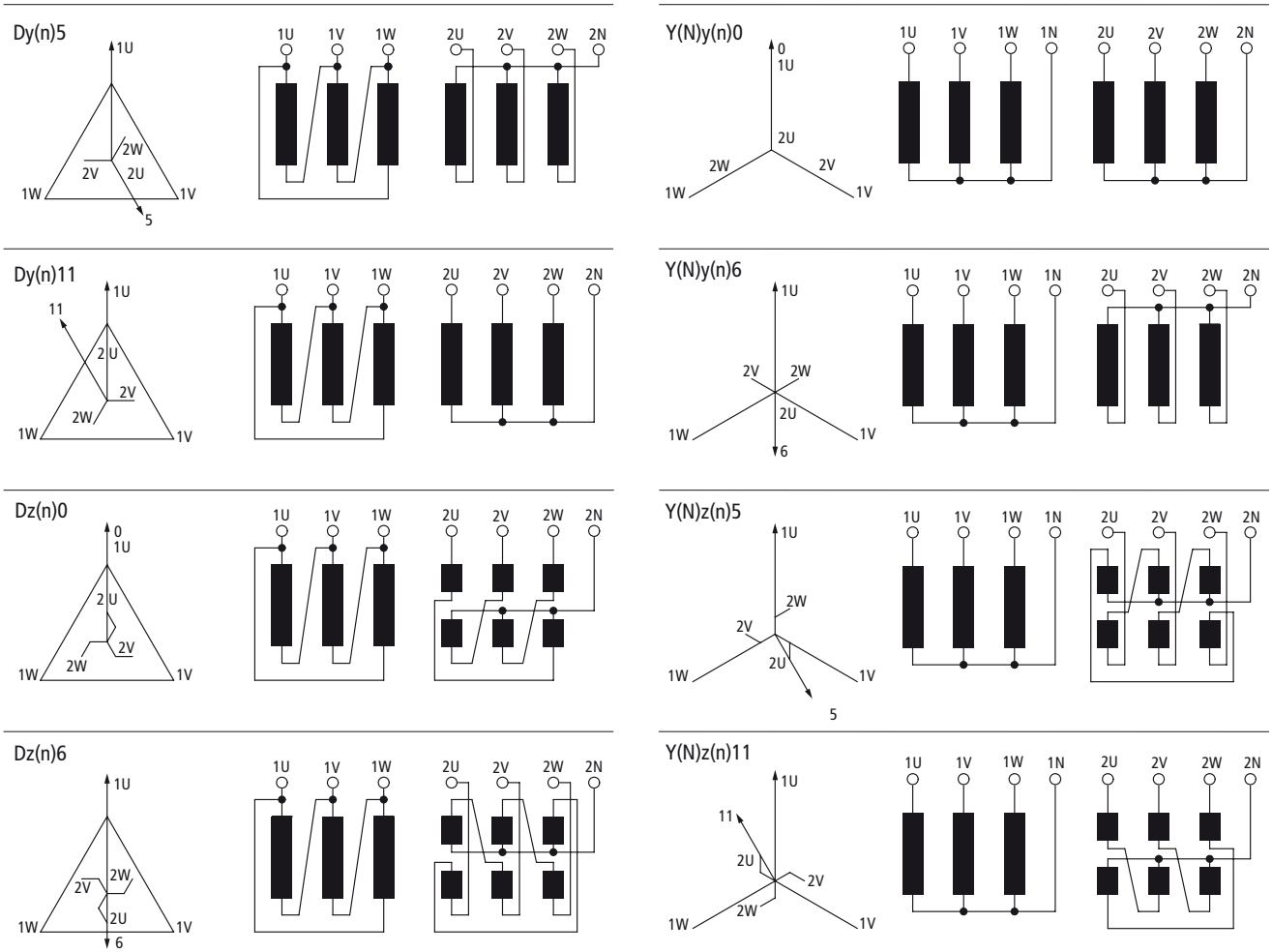

The accessible star point is made clear by an added n secondary (N primary) to the switching group. Standard circuit is Yy0.

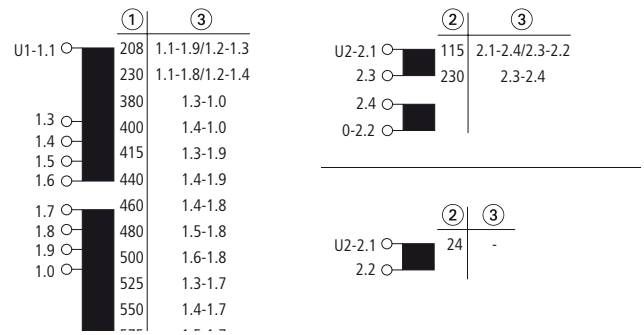

Determination of the continuous rating

The control transformer must be rated in size so that the voltage drop remains within the permissible tolerance range even under unfavourable conditions.

The determination of the transformer rating is performed by the addition of all the sealing powers of all loads which are to be connected simultaneously as well as addition of the inrush power of the largest load, and multiplying the result by a factor of 0.8. If the ratings of the loads are very similar, the sum of all inrush powers of the simultaneously connected loads is added to the sum of all the sealing powers and the result is multiplied by a factor of 0.8.

Determination of the short-time rating

If the primary requirement is to switch large contactors, it is recommended that the control transformer is selected on the basis of the short-time rating. In most cases, this will mean that the transformer rating is reduced.

It is important to ensure that the sealing power does not exceed the continuous rating.

Eaton Online Catalog – find product details quickly and efficiently!

You can find comprehensive up-to-date product information at **http://de.ecat.moeller.net**

Search

Keywords, common type references or part numbers, technical benchmark data: Search can validate any input and leads you to your desired product.

Graphical navigation

Graphical representation of the fields of application and product groups.

Selection aids

Aligned to a typicalexperts approach: Search aids lead you to your desired product quickly.

Data Sheets

For each product in the catalog: Generate a data sheet with all detailed technical information. Just one click converts it to pdf and then it is ready for printing or saving.

Parts lists

From your search results you can create a parts list which you can then send to your Eaton sales partner as a query.

HTML data sheet. Can be saved as pdf or excel.

Parts list, e.g. for queries to Eaton Sales.

You can find comprehensive up-to-date information about Eaton's automationproducts and switchgear in our Online Catalog.

At Eaton, we're energized by the challenge of powering a world that demands more. With over 100 years experience in electrical power management, we have the expertise to see beyond today. From groundbreaking products to turnkey design and engineering services, critical industries around the globe count on Eaton.

We power businesses with reliable, efficient and safe electrical power management solutions. Combined with our personal service, support and bold thinking, we are answering tomorrow's needs today. Follow the charge with Eaton. Visit **eaton.eu.**

To contact an Eaton salesperson or local distributor/agent, please visit www.eaton.eu/electrical/customersupport

Eaton Industries GmbH
Hein-Moeller-Str. 7–11
D-53115 Bonn/Germany

Printed in Germany 08/18
Bezeichnung: BR009002EN / CSSC-1616
ip August 2018
Artikelnr.: 191997

4 015081 925216

Powering Business Worldwide