ZEZ SILKO
Get energized with us

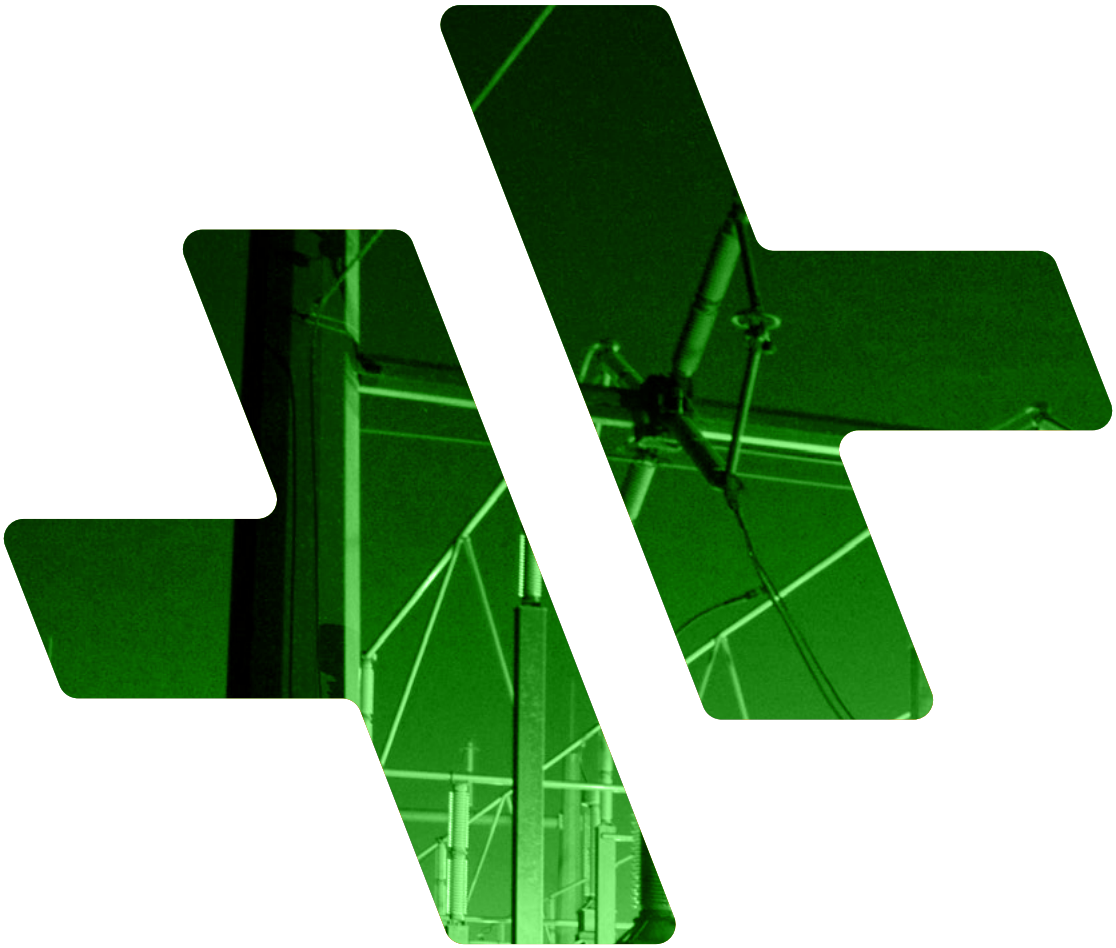

POWER FACTOR CORRECTION

Power capacitors

www.zez-silko.com

INDEX

Company profile 3
PFC in general 4
LV Power Capacitors 6
N - Normal 8
HD - Heavy Duty 12
UHD - Ultra Heavy Duty 16
LV Detuning Reactors 18
PFC Controllers 22
Capacitor Switching Contactor 24
MV Power Capacitors 26
MV Detuning Reactors 34
MV Inrush Current Reactors 35
MV Vacuum Contactor 36
MV Instrument Transformers 37
Capacitor Banks 38

GET ENERGIZED WITH US

COMPANY PROFILE

ZEZ SILKO s.r.o. is a reputable manufacturer of power capacitors, capacitors for power electronics, capacitors for induction heating and many other capacitor types. Company ZEZ SILKO s.r.o. provides complete power factor correction service including: power system evaluation including harmonic analysis, technical and commercial quotations, capacitor banks production and commissioning. Components for power factor correction and regulation of electrical energy are also supplied. ZEZ SILKO products are being exported to countries all around the world. They are for use on traction systems (locomotives, trams, troleybuses), green energy generation (wind and photovoltaic power plants), energy sector (power factor correction) and also induction heating equipment. ZEZ SILKO s.r.o. has always been and will continue to be your reliable business partner.

European manufacturer of capacitors

Tradition of capacitor production since 1930

Emphasis to quality of products

Quality control system (ISO 9001) since 1999

IRIS certification since 2014

Products are exported to countries all around the world

Basics of PFC

Many electrical devices, equipments and systems needs an electromagnetic field for their standard operation. This physical necessity leads to a consumption of reactive power which is used to provide basic function but not any active power. It means that transmission and distribution system is loaded with this reactive power and that's not an economically effective use and therefore it's penalized by electrical utility companies. The solution is to use local power factor compensation to provide the required rective power from power capacitors directly to the appliance to avoid undesired load of the mains network.

Systems with higher harmonics content may be sensitive to create resonant circuit between power capacitors and inductance of a transformer and may cause damage of an electrical system. The solution is to use detuned PFC which combines power capacitors with detuning reactors. This detuned system shifts the resonance frequency to lower values (below first harmonic) where no harmonics are present so the safe operation of the whole system is ensured. Besides this such circuit has a certain tuning frequency that offers a filtering effect for the harmonic currents and thanks to this reduces the distortion level in the grid system.

Note that detuning reactors and their inductance must be selected to match exactly capacitor capacitance to obtain the desired tuning frequency. Also note the capacitor is exposed to increased voltage than the nominal grid voltage in detuned PFC systems because of series connection with detuning reactor.

Application

Intended for individual, group or central power factor correction

Example of detuned PFC system
with basic components:

- **Contactors**
- **PFC Controllers**
- **Detuning reactors**
- **Power capacitors**

Calculation table and formula for required reactive power

original $\cos\varphi_1$	k coefficient for target $\cos\varphi_2$										
	0.90	**0.91**	**0.92**	**0.93**	**0.94**	**0.95**	**0.96**	**0.97**	**0.98**	**0.99**	**1.00**
0.70	0.54	0.54	0.59	0.62	0.66	0.69	0.73	0.77	0.82	0.88	1.02
0.75	0.40	0.43	0.46	0.49	0.52	0.55	0.59	0.63	0.68	0.74	0.88
0.80	0.27	0.29	0.32	0.35	0.39	0.42	0.46	0.50	0.55	0.61	0.75
0.82	0.21	0.24	0.27	0.30	0.34	0.37	0.41	0.45	0.49	0.56	0.70
0.84	0.16	0.19	0.22	0.25	0.28	0.32	0.35	0.40	0.44	0.50	0.65
0.85	0.14	0.16	0.19	0.22	0.26	0.29	0.33	0.37	0.42	0.48	0.62
0.86	0.11	0.14	0.17	0.20	0.23	0.26	0.30	0.34	0.39	0.45	0.59
0.87	0.08	0.11	0.14	0.17	0.20	0.24	0.28	0.32	0.36	0.42	0.57
0.88	0.06	0.08	0.11	0.14	0.18	0.21	0.25	0.29	0.34	0.40	0.54
0.89	0.03	0.06	0.09	0.12	0.15	0.18	0.22	0.26	0.31	0.37	0.51
0.90		0.03	0.06	0.09	0.12	0.16	0.19	0.23	0.28	0.34	0.48
0.91			0.03	0.06	0.09	0.13	0.16	0.20	0.25	0.31	0.46
0.92				0.03	0.06	0.10	0.13	0.18	0.22	0.28	0.43
0.93					0.03	0.07	0.10	0.14	0.19	0.25	0.40
0.94						0.03	0.07	0.11	0.16	0.22	0.36
0.95							0.04	0.08	0.13	0.19	0.33

Q_C - Reactive power of the required power capacitor
P - Active power of the load to be corrected
S - Apparent power
k - Conversion coefficient
φ_1 - Original angle
φ_2 - Target angle

$$Q_C = P \cdot k = P\,(\tan\varphi_1 - \tan\varphi_2)$$

$$P = S \cdot \cos\varphi$$

Example:

Load power P	**= 100kW**
Original $\cos\varphi_1$	**= 0,75**
Target $\cos\varphi_2$	**= 0,95**
k coeff. (from table)	**= 0,55**

→

Capacitor reactive power Q_C:
$Q_C = P \cdot k = 100 \cdot 0{,}55 = 55$ kvar

Detuned power factor correction

U_C - **Capacitor voltage** - rms value of required voltage of the capacitor. The reactor causes increase of the mains voltage at capacitor.

p - **Detuning factor** - ratio of reactor inductance and capacitor capacitance reactances.

f_r - **Series resonance frequency** - between reactor and capacitor.

U_N - Nominal (rated) mains voltage

f_N - Nominal (rated) mains frequency

$$U_c = \frac{U_N}{1 - \frac{p}{100\%}}$$

$$p = \frac{X_1}{X_C} \cdot 100\%$$

$$f_r = f_N \cdot \sqrt{\frac{100\%}{p}}$$

Basic parameters

- Voltage 230 – 1000V
- Output up to 50 kvar
- Self-healing dry design
- Three Phase – Delta connection
- Single Phase on request
- Overpressure disconnector
- Built-in discharge resistors
- Other voltages and power on request

Options

- IP 54 protection covers for selected types
- Mounting clamps

Application

Power capacitors are intended for individual, group or central power factor correction. To compensate inductive reactive power of industrial appliances such as electric motors, welding equipments, etc. This inductive power is undesirable for the grid provider and shall be avoided with power factor compensation.

Construction

Power capacitors are produced in MKP system. It means metallized polypropylene with self-healing properties and extremely low dielectric losses. Capacitors are filled either with inert gas (N2) for CSADG types or semi solid resin for CSADP types. The resin is non-toxic and ecologically friendly. Three phase capacitors have three elements connected in delta. Capacitors are protected with overpressure disconnector, which ensures safe disconnection of the capacitor from the network in the event of overloading or at the end of its operation life. All the capacitors are equipped with built-in discharge resistors.

The case of the capacitor is protected against bursting by the overpressure disconnector. Its proper function is ensured only if the specifications and conditions (voltage, current, temperature, correct installation, maintenance) are observed. Failure to meet and/or exceed these conditions may result in bursting of the capacitor case or even explosion and subsequent fire.

Instalation instructions

Before installation it is necessary to make sure whether the nominal data of the capacitors correspond with the data indicated in the project and in the purchase order.

For cable connection of terminals or bolts and earthing bolts the following torques must be respected (unless different values for individual parts of the equipment are specified):

Type of terminal	Max. cable cross section	Recommended fixing torque	Screw head type
A	16 mm2	1,2 - 1,7 Nm	PH1
B	25 mm2	2,0 - 2,5 Nm	PH2
C	35 mm2	2,5 - 4,0 Nm	Hex

Recommended distance between capacitors situated in the capacitor bank is 20 mm at least.

It is recommended to check all the electric connections after a few days of operation and to make a visual inspection of all capacitors.

Before the switch on of the equipment check the connection and function of protection devices in the absence of voltage.
The fuses must be designed for capacitors, characteristic gG. The nominal voltage of the fuses must comply at least with the next higher normative voltage of the net, and the fuses must withstand current 1,6 times higher of the max. current on the capacitor.

Product application guide

Series	Specification	THD-U	Lifetime Expectancy	Temp. Category
N	For standard operating conditions.	≤ 2 %	> 130 000 h	-40 / D
HD	For general use in high level applications.	≤ 3 %	> 150 000 h	-40 / D (60°C)
UHD	For applications with more demanding operating conditions.	≤ 4 %	> 180 000 h	-40 / D (60°C)

Max. permissible voltage

RMS Overvoltage	Max. period
1.10 x U_N	8 hours / day
1.15 x U_N	30 min / day
1.20 x U_N	5 min (200x)
1.30 x U_N	1 min (200x)

Temperature categories

Temperature category	Ambient temperature		
	Max.	24 hours*	1 year*
C	50°C	40°C	30°C
D	55°C	45°C	35°C
D (60°C)	60°C	45°C	35°C

* Max. mean value during period

N - Normal

Three phase power capacitors, selfhealing, dry - gas filled

General technical parametres

Standards	IEC EN 60831-1/2, VDE 0560-46/47, GOST 1282-88
Rated Voltage	400 - 525 V / 50 Hz
Rated Power	1 - 50 kvar
Capacitance Tolerance	-5 / +10 %
Max. Permissible Current	1,5 x I_N Continuous
Max. Inrush Current	300 x I_N
Capacitor Losses	cca 0,4 W / kvar
Discharge Resistors	built-in 50 V / 1 min (75 V / 3 min over 30 kvar)
Statistical Life Expectancy	> 130 000 hours according to operating conditions
Protection Degree	IP 20 (IP 54 selected types on request)
Max. Relative Humidity	95 %
Cooling	Natural Air or Forced
Max. Altitude	4 000 m
Mounting Position	Any position
Case	Aluminium can
Dielectric System	Dry metallized polypropylene
Impregnant / Filling	Inert gas N_2 or semi-dry resin (50 kvar)
Safety Device	Overpressure disconnector
Terminals	Two side - 6 clamps

Overpressure disconnector function

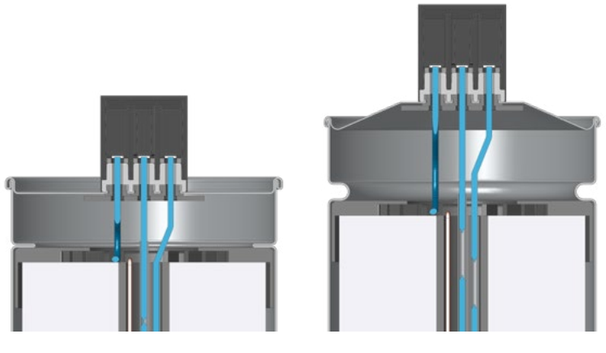

Standard types

(other voltages, power and 60 Hz on request)

Features

I_{max} = 1,5 x I_N

Lifetime Expectancy: > 130 000 h
Temperature Class: -40/D
Dry type: gas filling

N - Normal

400 V / 50 Hz

Q_c (kvar)	Type	C_N (Δ) (µF)	I_N (A)	Ø D x H (mm)	m (kg)	Drawing
10	CSADG 1-0,4/10N	3 x 66,3	14,4	85 x 245	1,1	1
12,5	CSADG 1-0,4/12,5N	3 x 82,9	18	85 x 245	1,2	1
20	CSADG 4-0,4/20N	3 x 133	28,9	110 x 245	1,7	2
25	CSADG 4-0,4/25N	3 x 166	36,1	110 x 245	2,0	2
30	CSADG 4-0,4/30N	3 x 199	43,3	110 x 245	2,2	2
40	CSADG 3-0,4/40N	3 x 265	57,8	136 x 261	3,4	3

415 V / 50 Hz

Q_c (kvar)	Type	C_N (Δ) (µF)	I_N (A)	Ø D x H (mm)	m (kg)	Drawing
10	CSADG 1-0,415/10N	3 x 61,6	13,9	85 x 245	1,1	1
15	CSADG 1-0,415/15N	3 x 92,5	20,9	85 x 245	1,3	1
20	CSADG 1-0,415/20N	3 x 123	27,8	110 x 245	1,7	1
25	CSADG 1-0,415/25N	3 x 154	34,8	110 x 245	2,0	1
30	CSADG 3-0,415/30N	3 x 185	41,7	136 x 220	2,8	3
40	CSADG 3-0,415/40N	3 x 247	55,6	136 x 261	3,1	3
50	CSADP 3-0,415/50N	3 x 308	69,6	136 x 261	3,8	3

440 V / 50 Hz

Q_c (kvar)	Type	C_N (Δ) (µF)	I_N (A)	Ø D x H (mm)	m (kg)	Drawing
10	CSADG 1-0,44/10N	3 x 54,8	13,1	85 x 245	1,1	1
12,5	CSADG 1-0,44/12,5N	3 x 68,5	16,4	85 x 245	1,1	1
15	CSADG 1-0,44/15N	3 x 82,2	19,7	85 x 245	1,2	1
20	CSADG 4-0,44/20N	3 x 110	26,2	110 x 245	1,7	2
25	CSADG 4-0,44/25N	3 x 137	32,8	110 x 245	1,9	2
28,1	CSADG 4-0,44/28,1N	3 x 154	36,8	110 x 245	2,1	2
30	CSADG 4-0,44/30N	3 x 164	39,4	110 x 245	2,2	2
40	CSADG 3-0,44/40N	3 x 219	52,5	136 x 261	3,1	3
50	CSADP 3-0,44/50N	3 x 274	65,6	136 x 261	3,8	3

N - Normal

Features

$I_{max} = 1,5 \times I_N$

Lifetime Expectancy: > 130 000 h
Temperature Class: -40/D
Dry type: gas filling

480 V / 50 Hz

Q_c (kvar)	Type	C_N (Δ) (μF)	I_N (A)	D x H (mm)	m (kg)	Drawing
7,5	CSADG 1-0,48/7,5N	3 x 34,6	9,0	85 x 175	0,8	1
12	CSADG 1-0,48/12N	3 x 55,3	14,4	85 x 245	1,0	1
15	CSADG 1-0,48/15N	3 x 69,1	18,0	85 x 245	1,3	1
18	CSADG 1-0,48/18N	3 x 82,9	21,7	110 x 245	1,5	1
20	CSADG 1-0,48/20N	3 x 92,2	24,1	110 x 245	1,7	1
25	CSADG 1-0,48/25N	3 x 115	30,1	110 x 245	1,9	1
30	CSADG 1-0,48/30N	3 x 138	36,1	110 x 245	2,1	1
50	CSADG 3-0,48/50N	3 x 230	60,1	136 x 261	3,4	3

525 V / 50 Hz

Q_c (kvar)	Type	C_N (Δ) (μF)	I_N (A)	D x H (mm)	m (kg)	Drawing
10	CSADP 3-0,525/10	3 x 38,5	11,0	85 x 175	1,0	1
12,5	CSADP 3-0,525/12,5	3 x 48,1	13,7	85 x 245	1,1	1
15	CSADP 3-0,525/15	3 x 57,8	16,5	85 x 245	1,2	1
20	CSADP 3-0,525/20	3 x 77,0	22,0	110 x 245	1,7	1
25	CSADP 3-0,525/25	3 x 96,3	27,5	110 x 245	1,9	2
30	CSADP 3-0,525/30	3 x 116	33,0	110 x 245	2,1	2
37,5	CSADP 3-0,525/37,5	3 x 144	41,2	136 x 261	3,2	3
40	CSADP 3-0,525/40	3 x 154	44,0	136 x 261	3,3	3
50	CSADP 3-0,525/50	3 x 193	55,0	136 x 261	3,8	3

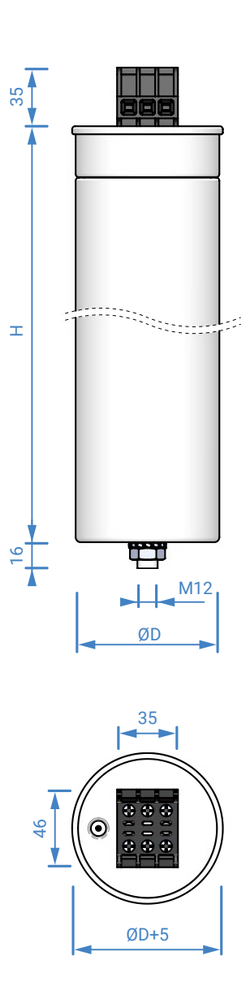

Drawing 1

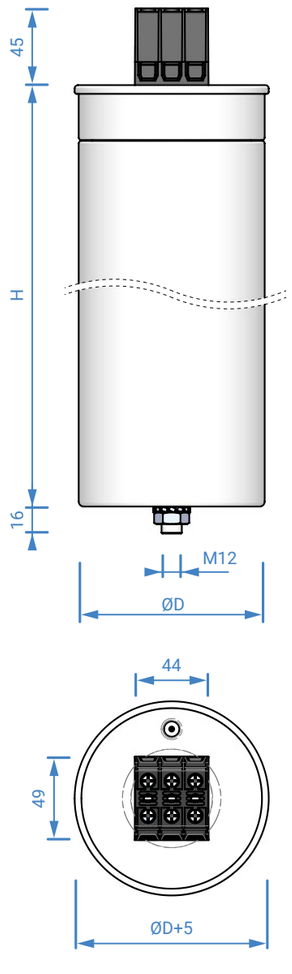

Drawing 2

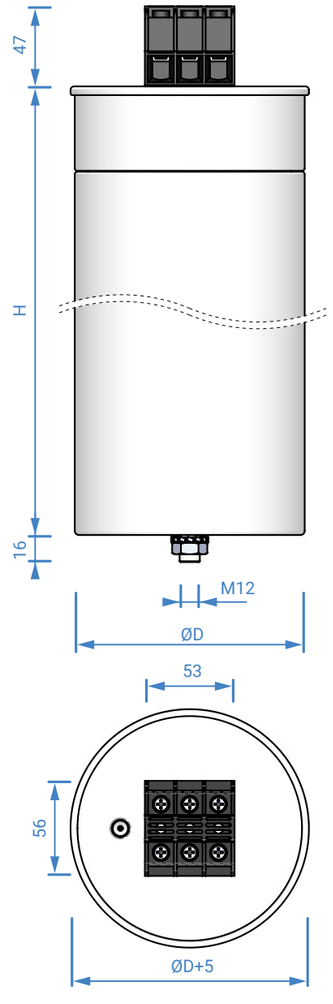

Drawing 3

HD - Heavy Duty

Three phase power capacitors, selfhealing, dry - gas filled

General technical parameters

Standards	IEC EN 60831-1/2, VDE 0560-46/47, GOST 1282-88
Rated Voltage	230 - 800 V / 50 Hz
Rated Power	1 - 50 kvar
Capacitance Tolerance	-5 / +10 %
Max. Permissible Current	1,5 x I_N Continuous, 2 x I_N Short period*
Max. Inrush Current	400 x I_N
Capacitor Losses	cca 0,4 W / kvar
Discharge Resistors	built-in 75 V / 3 min (50 V / 1 min up to 30 kvar)
Statistical Life Expectancy	> 150 000 hours according to operating conditions
Protection Degree	IP 20 (IP 54 selected types on request)
Max. Relative Humidity	95 %
Cooling	Natural Air or Forced
Max. Altitude	4 000 m
Mounting Position	Any position
Case	Aluminium can
Dielectric System	Dry metallized polypropylene
Impregnant / Filling	Inert gas N_2 or semi-dry resin (50 kvar)
Safety Device	3 fuses overpressure disconnector
Terminals	One side - 3 clamps

Note: * Maximum current for 48 hours continuous operation with relation to highest mean ambient temperature of 45°C over period of 24 h.

Overpressure disconnector function

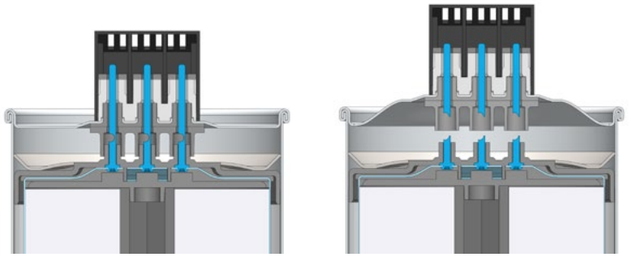

Standard types

(other voltages, power and 60 Hz on request)

Features

$I_{max} = 2 \times I_N$

Lifetime Expectancy: > 150 000 h
Temperature Class: -40/D (60 °C)
Dry type: gas filling

HD - Heavy Duty

400 V / 50 Hz

Q_C (kvar)	Type	C_N (Δ) (µF)	I_N (A)	D x H (mm)	m (kg)	Terminal
5	CSADG-0,4/5-HD	3 x 33,2	7,2	85 x 175	0,9	A
6,25	CSADG-0,4/6,25-HD	3 x 41,4	9,0	85 x 175	1,0	A
7,5	CSADG-0,4/7,5-HD	3 x 49,7	10,8	85 x 175	1,0	A
10	CSADG-0,4/10-HD	3 x 66,3	14,4	85 x 245	1,2	A
12,5	CSADG-0,4/12,5-HD	3 x 82,9	18,0	85 x 245	1,4	A
15	CSADG-0,4/15-HD	3 x 99,5	21,7	85 x 245	1,5	A
20	CSADG-0,4/20-HD	3 x 133	28,9	100 x 245	1,9	A
25	CSADG-0,4/25-HD	3 x 166	36,1	116 x 245	2,2	B
30	CSADG-0,4/30-HD	3 x 199	43,3	116 x 245	2,5	B
40	CSADG-0,4/40-HD	3 x 265	57,8	136 x 261	3,8	C
50	CSADG-0,4/50-HD	3 x 332	72,2	136 x 355	5,2	C

440 V / 50 Hz

Q_C (kvar)	Type	C_N (Δ) (µF)	I_N (A)	Ø D x H (mm)	m (kg)	Terminal
2,5	CSADG-0,44/2,5-HD	3 x 13,7	3,3	85 x 175	0,6	A
5	CSADG-0,44/5-HD	3 x 27,4	6,6	85 x 175	0,7	A
6,25	CSADG-0,44/6,25-HD	3 x 34,3	8,2	85 x 175	0,8	A
7,5	CSADG-0,44/7,5-HD	3 x 41,1	9,9	85 x 175	0,9	A
10	CSADG-0,44/10-HD	3 x 54,8	13,1	85 x 245	1,1	A
12,5	CSADG-0,44/12,5-HD	3 x 68,5	16,4	85 x 245	1,2	A
15	CSADG-0,44/15-HD	3 x 82,2	19,7	85 x 245	1,4	A
20	CSADG-0,44/20-HD	3 x 110	26,2	100 x 245	1,8	A
25	CSADG-0,44/25-HD	3 x 137	32,8	100 x 245	1,9	A
28,1	CSADG-0,44/28,1-HD	3 x 154	36,8	116 x 245	2,1	B
30	CSADG-0,44/30-HD	3 x 164	39,4	116 x 245	2,2	B
33,3	CSADG-0,44/33,3-HD	3 x 183	43,7	136 x 261	3,8	B
37,5	CSADG-0,44/37,5-HD	3 x 206	49,2	136 x 261	3,9	B
40	CSADG-0,44/40-HD	3 x 219	52,5	136 x 261	4,0	B
50	CSADG-0,44/50-HD	3 x 274	65,6	136 x 355	5,0	C

HD - Heavy Duty

Features

$I_{max} = 2 \times I_N$

Lifetime Expectancy: > 150 000 h
Temperature Class: -40/D (60 °C)
Dry type: gas filling

480 V / 50 Hz

Q_c (kvar)	Type	C_N (Δ) (μF)	I_N (A)	Ø D x H (mm)	m (kg)	Terminal
10	CSADG-0,48/10-HD	3 x 46,0	12,0	85 x 245	1,1	A
12,5	CSADG-0,48/12,5-HD	3 x 57,6	15,0	85 x 245	1,3	A
15	CSADG-0,48/15-HD	3 x 69,1	18,0	85 x 245	1,5	A
20	CSADG-0,48/20-HD	3 x 92,1	24,1	100 x 245	2,2	A
25	CSADG-0,48/25-HD	3 x 115	30,1	116 x 245	2,4	B
30	CSADG-0,48/30-HD	3 x 138	36,1	116 x 245	2,6	B
33,3	CSADG-0,48/33,3-HD	3 x 153	40,1	136 x 220	2,9	B
36	CSADG-0,48/36-HD	3 x 166	43,5	136 x 261	3,1	B
40	CSADG-0,48/40-HD	3 x 184	48,1	136 x 261	3,3	B

525 V / 50 Hz

Q_c (kvar)	Type	C_N (Δ) (μF)	I_N (A)	Ø D x H (mm)	m (kg)	Terminal
5	CSADG-0,525/5-HD	3 x 19,2	5,5	85 x 175	0,8	A
10	CSADG-0,525/10-HD	3 x 38,5	11,0	85 x 245	1,0	A
12,5	CSADG-0,525/12,5-HD	3 x 48,1	13,7	85 x 245	1,1	A
15	CSADG-0,525/15-HD	3 x 57,7	16,5	85 x 245	1,3	A
20	CSADG-0,525/20-HD	3 x 77,0	22,0	100 x 245	1,9	A
25	CSADG-0,525/25-HD	3 x 96,2	27,5	116 x 245	2,1	B
30	CSADG-0,525/30-HD	3 x 116	33,0	116 x 245	2,3	B
33,3	CSADG-0,525/33,3-HD	3 x 128	36,6	136 x 261	3,5	B
37,5	CSADG-0,525/37,5-HD	3 x 144	41,2	136 x 261	3,6	B
40	CSADG-0,525/40-HD	3 x 154	44,0	136 x 261	3,7	B
50	CSADG-0,525/50-HD	3 x 193	55,0	136 x 355	5,5	C

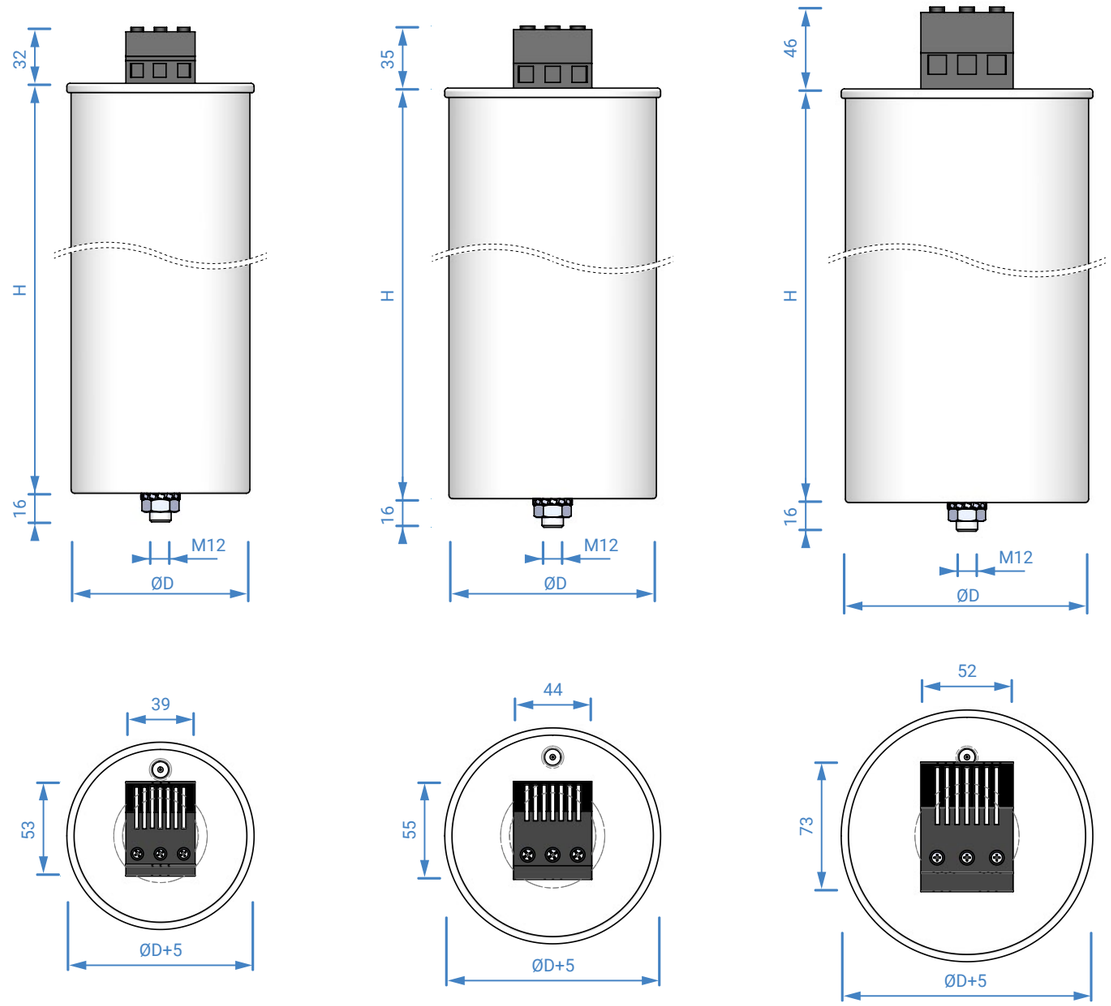

Terminal A Terminal B Terminal C

Terminal	A	B	C
Max. cross section (mm²)	16	25	35

UHD - Ultra Heavy Duty

Three phase power capacitors, selfhealing, semi dry resin

General technical parameters

Standards	IEC EN 60831-1/2, VDE 0560-46/47, GOST 1282-88
Rated Voltage	440 V, 525 V / 50 Hz
Rated Power	1 - 50 kvar
Capacitance Tolerance	-5 / +10 %
Max. Permissible Current	1,5 x I_N Continuous, 2,5 x I_N Short period *
Max. Inrush Current	400 x I_N
Capacitor Losses	cca 0,4 W / kvar
Discharge Resistors	built-in 75 V / 3 min
Statistical Life Expectancy	> 180 000 hours according to operating conditions
Protection Degree	IP 20 (IP 54 selected types on request)
Max. Relative Humidity	95 %
Cooling	Natural Air or Forced
Max. Altitude	4 000 m
Mounting Position	Any position
Case	Aluminium can
Dielectric System	Dry metallized polypropylene
Impregnant / Filling	Semi-dry resin
Safety Device	3 fuses overpressure disconnector
Terminals	One side - 3 clamps

Note: * Maximum current for 48 hours continuous operation with relation to highest mean ambient temperature of 45°C over period of 24 h.

Overpressure disconnector function

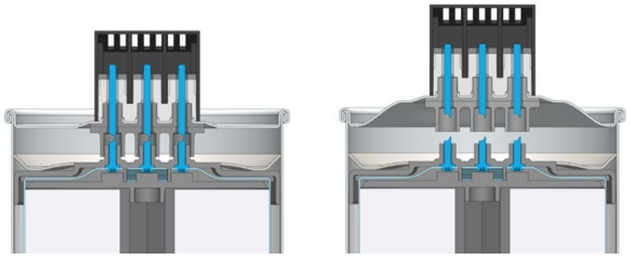

Standard types

(other voltages, power and 60 Hz on request)

Features

I_{max} = 2,5 x I_N

Lifetime Expectancy: > 180 000 h
Temperature Class: -40/D (60 °C)
Semi Dry type: semi-dry resin

UHD - Ultra Heavy Duty

440 V / 50 Hz

Q_C (kvar)	Type	C_N (Δ) (µF)	I_N (A)	Ø D x H (mm)	m (kg)	Terminal
6,25	CSADG-0,44/6,25-UHD	3 x 34,3	8,2	85 x 175	1,1	A
7,5	CSADG-0,44/7,5-UHD	3 x 41,1	9,9	85 x 175	1,2	A
10	CSADG-0,44/10-UHD	3 x 54,8	13,1	85 x 245	1,4	A
12,5	CSADG-0,44/12,5-UHD	3 x 68,5	16,4	85 x 245	1,5	A
15	CSADG-0,44/15-UHD	3 x 82,2	19,7	85 x 245	1,6	A
20	CSADG-0,44/20-UHD	3 x 110	26,2	100 x 245	2,5	A
25	CSADG-0,44/25-UHD	3 x 137	32,8	116 x 245	3,2	B
28,1	CSADG-0,44/28,1-UHD	3 x 154	36,8	116 x 245	3,3	B
30	CSADG-0,44/30-UHD	3 x 164	39,4	116 x 245	3,3	B
40	CSADG-0,44/40-UHD	3 x 219	52,5	136 x 261	4,0	B
50	CSADG-0,44/50-UHD	3 x 274	65,6	136 x 355	5,0	C

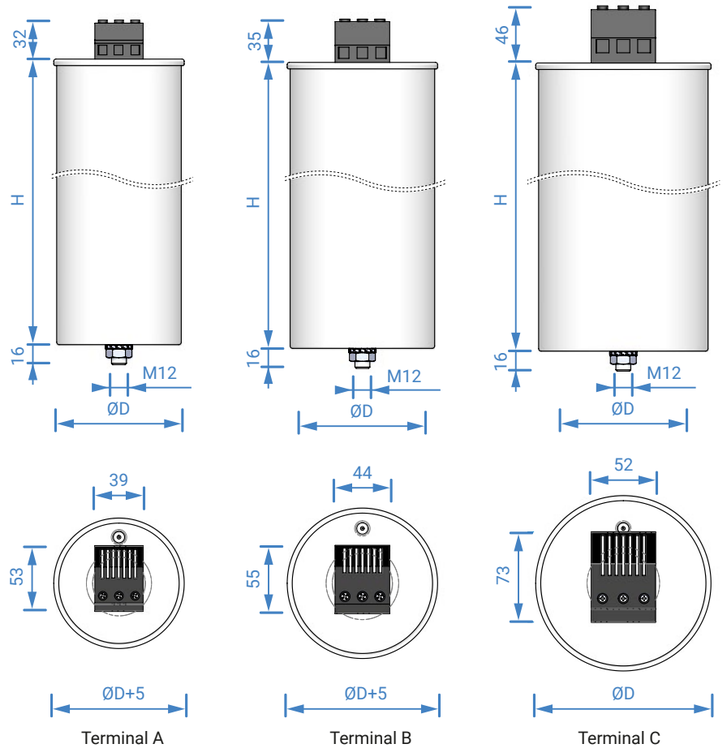

LV Detuning Reactors

General technical parameters

Standards	IEC EN 60076-6, IEC EN 61558-2-20
Rated Voltage	400 - 800 V / 50 Hz
Rated Power	1 - 100 kvar
Inductance Tolerance	-5 / +5 %
Detuning Factor	5,67 %, 7 %, 14 %
Resonance Frequency	210 Hz, 189 Hz, 134 Hz
Temperature Class	F (155 °C)
Ambient Temperature	40 °C
Statistical Life Expectancy	> 200 000 hours
Protection Degree	IP 00
Insulation (winding - core)	3 kV
Max. Relative Humidity	95 %
Max. Altitude	4 000 m
Cooling	Natural Air or Forced
Design	Three phase, iron core with multi air gap
Winding Material	Copper (TKC), Aluminium (TKA)
Impregnant	Polyester (epoxy) resin
Safety Device	Thermal switch (TKA-130 °C, TKC-90 °C)
Terminals	Terminal block, Cable lug, Al bar

Application

Frequent use of power electronic devices with nonlinear loads leads to harmonic distortion in electrical system. This nonsinusoidal load causes increase of effective current of power capacitor and other components of the system as well as the posibility of capacitor resonance with other inductive loads. Finally it may lead to problems or even failures in the installation. The solution is to use detuning (filtering) reactors, which creates a series resonant circuit with power capacitors. This detuned system prevents the installation from resonance effect and also acts as a filter for higher harmonic content. Usually there is recommended to use detuning reactors for the total voltage distortion THD-U higher than 3 %.

Construction

Detuning reactors are produced from high grade, low loss transformer sheets, with winding either from copper wire or aluminium band. Iron core is designed with multi air gap to meet high current linearity and low thermal losses. They are impregnated with high quality epoxy resin to ensure good insulation, low noise and long lifetime. Reactors are equipped with thermal protection to prevent overheating. Reactors with lower rated power are designed with copper wire and outlets via terminal block or cable lug. Higher power rated reactors are produced from aluminium band with outlets as aluminium bars (copper outlets are possible on request).

Reactor power designation

Reactor type designation is always according to power of matching capacitor Q_C.

Q_C - Rated power of the capacitor

Q_{LC} - Rated power of the detuned system (capacitor + reactor)

Power		Capacitance		Inductance	Current	Weight	Dimensions
Q_C (kvar)	Q_{LC} (kvar)	C_N (Δ) (μF)	Type	L_N (mH)	I_N (A)	m (kg)	WxDxH (mm)
U_N = 400 V	U_C = 440 V	p = 7 % (189Hz)	$I_{lin} \geq 1,6\ I_N$				
50	44,4	274	TKA1-**50**-189/400/440	0,86	64,1	23	250 x 185 x 215
56,2	**50**	308	TKA1-**56,2**-189/400/440	0,77	72,0	23	250 x 185 x 215

Standard types

(other voltages, power and 60 Hz on request)

p = 7 % U_N = 400 V U_C = 440 V $I_{lin} \geq 1,6\ I_N$

Q_C (kvar)	Q_{LC} (kvar)	C_N (Δ) (μF)	Type	L_N (mH)	I_N (A)	m (kg)	WxDxH (mm)	Design
5	4,4	27,4	TKC1-05-189/400/440	8,64	6,4	4,5	150 x 90 x 150	Cu / 1
6,25	5,6	34,3	TKC1-06,25-189/400/440	6,90	8,0	4,5	150 x 90 x 150	Cu / 1
10	8,9	54,8	TKC1-10-189/400/440	4,32	12,8	7,5	180 x 100 x 180	Cu / 1
12,5	11	68,5	TKC1-12,5-189/400/440	3,46	16,0	8,5	180 x 110 x 180	Cu / 1
15	13,3	82,2	TKC1-15-189/400/440	2,88	19,2	11	180 x 120 x 180	Cu / 1
20	17,8	110	TKC1-20-189/400/440	2,17	25,6	11	180 x 120 x 180	Cu / 1
25	22,2	137	TKC1-25-189/400/440	1,73	32,1	15	180 x 135 x 180	Cu / 1
25	22,2	137	TKA1-25-189/400/440	1,73	32,1	13	235 x 150 x 160	Al / 2
2 x 25	2 x 22,2	2 x 137	TKA1-2x25-189/400/440	1,73	32,1	25	235 x 150 x 290	Al / 2
28,1	25	154	TKA1-28,2-189/400/440	1,53	36,0	13	235 x 150 x 160	Al / 2
2 x 28,1	2 x 25	2 x 154	TKA1-2x28,1-189/400/440	1,53	36,0	25	235 x 150 x 290	Al / 2
30	26,7	164	TKA1-30-189/400/440	1,44	38,5	17	255 x 160 x 195	Al / 2
40	35,5	219	TKA1-40-189/400/440	1,08	51,3	18	255 x 160 x 195	Al / 2
50	44,4	274	TKA1-50-189/400/440	0,86	64,1	23	250 x 185 x 215	Al / 2
2 x 50	2 x 44,4	2 x 274	TKA1-2x50-189/400/440	0,86	64,1	40	250 x 185 x 380	Al / 2
56,2	50	308	TKA1-56,2-189/400/440	0,77	72,0	23	250 x 185 x 215	Al / 2
2 x 56,2	2 x 50	2 x 308	TKA1-2x56,2-189/400/440	0,77	72,0	40	250 x 185 x 380	Al / 2
75	66,7	411	TKA1-75-189/400/440	0,58	96,1	31	305 x 190 x 255	Al / 2
100	88,9	548	TKA1-100-189/400/440	0,43	128,0	34	305 x 190 x 255	Al / 2

p = 7 % U_N = 400 V U_C = 525 V I_{lin} ≥ 1,6 I_N

Q_C (kvar)	Q_{LC} (kvar)	C_N (Δ) (μF)	Type	L_N (mH)	I_N (A)	m (kg)	WxDxH (mm)	Design
12,5	7,8	48,1	TKC1-12,5-189/400/525	4,91	11,3	8,5	180 x 100 x 180	Cu / 1
25	15,6	96,2	TKC1-25-189/400/525	2,46	22,5	11	180 x 120 x 180	Cu / 1
50	31,2	192	TKA1-50-189/400/525	1,23	45,0	22	250 x 185 x 215	Al / 2
75	46,8	289	TKA1-75-189/400/525	0,82	67,6	23	250 x 185 x 215	Al / 2

p = 5,67 % U_N = 400 V U_C = 440 V I_{lin} ≥ 2,0 I_N

Q_C (kvar)	Q_{LC} (kvar)	C_N (Δ) (μF)	Type	L_N (mH)	I_N (A)	m (kg)	WxDxH (mm)	Design
6,25	5,5	34,3	TKC1-6,25-210/400/440	5,60	7,9	4,5	150 x 90 x 155	Cu / 1
12,5	11,0	68,5	TKC1-12,5-210/400/440	2,80	15,8	8,5	180 x 110 x 180	Cu / 1
25	21,9	137	TKA1-25-210/400/440	1,40	31,6	13	235 x 150 x 160	Al / 2
50	43,8	274	TKA1-50-210/400/440	0,70	63,2	23	250 x 185 x 215	Al / 2

p = 14 % U_N = 400 V U_C = 480 V I_{lin} ≥ 1,38 I_N

Q_C (kvar)	Q_{LC} (kvar)	C_N (Δ) (μF)	Type	L_N (mH)	I_N (A)	m (kg)	WxDxH (mm)	Design
12,5	10,1	57,5	TKC1-12,5-134/400/480	8,21	14,6	14	180 x 135 x 180	Cu / 1
25	20,2	115	TKA1-25-134/400/480	4,11	29,1	25	285 x 180 x 215	Al / 2
30	24,2	138	TKA1-30-134/400/480	3,42	35,0	25	285 x 180 x 215	Al / 2
50	40,4	230	TKA1-50-134/400/480	2,05	58,3	37	335 x 190 x 255	Al / 2
60	48,5	276	TKA1-60-134/400/480	1,71	69,9	37	335 x 190 x 255	Al / 2

p = 14 % U_N = 400 V U_C = 525 V I_{lin} ≥ 1,38 I_N

Q_C (kvar)	Q_{LC} (kvar)	C_N (Δ) (μF)	Type	L_N (mH)	I_N (A)	m (kg)	WxDxH (mm)	Design
12,5	8,4	48,2	TKC1-12,5-134/400/525	9,77	12,2	14	180 x 135 x 180	Cu / 1
25	16,8	96,4	TKC1-25-134/400/525	4,88	24,3	18	225 x 135 x 180	Cu / 1
37,5	25,3	144	TKA1-37,5-134/400/525	3,27	36,5	24	285 x 180 x 215	Al / 2
50	33,7	193	TKA1-50-134/400/525	2,46	48,7	27	300 x 185 x 215	Al / 2
75	50,6	289	TKA1-75-134/400/525	1,64	73,1	37	335 x 190 x 255	Al / 2

Terminal	1	2	3
Type	Terminal Black	Al bar	Cable lug*

* optional, on request

Design Cu/1

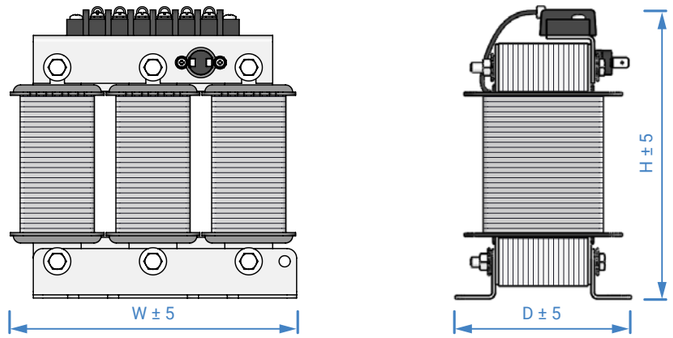

Design Al/2

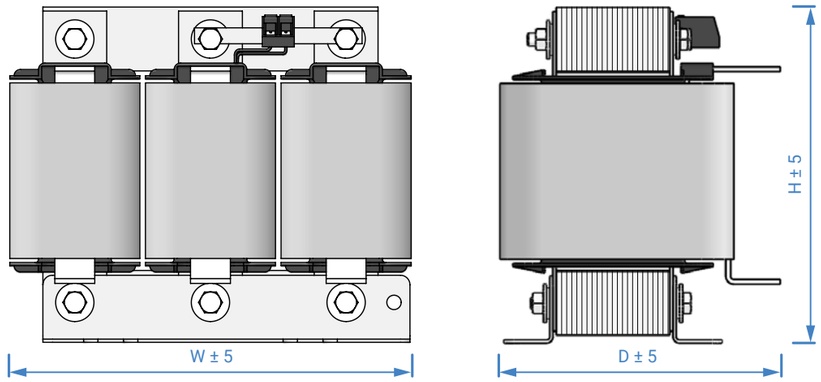

Design Al/2 - double

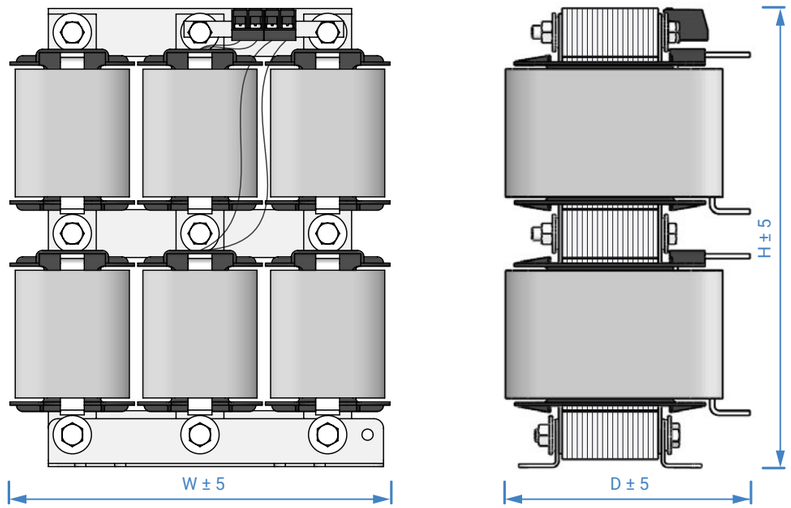

PFC Controllers

Technical features

MULTI PFR 6/12		
Voltage circuit	Power supply voltage Tolerance Frequency	100 - 520 V AC 10% 50 / 60 Hz
Measurement circuit	Measurement voltage Current transformers	35 - 520 V AC Ph-Ph 20 - 3000 V AC Ph-N 1x or 3x pcs /5 or /1 A
Leakage current	Measurement range	$I_{\Delta prim}$ = 10 mA - 1,5 A AC
Accuracy	Voltage and current Active power measurement	0,5% ±1 digit 0,5 % ±2 digit
Output relays	No. of relays	depending on type
Digital outputs	No. of relays Type U_{max} / I_{max}	2 NPN transistor 24 V DC / 50 mA
Digital inputs	No. of inputs	2
Alarms	No. of alarms	17
Communications	Port Protocol	RS-485 Modbus / RTU
Safety	Insulation Protection degree	Category III Class II IP31 IP51 (front panel)

PFC controller MULTI PFR 6/12

The new generation of the MULTI PFR reactive energy controller has been developed to meet the most demanding reactive power regulation requirements.
The MULTI PFR controller provides possibility of using three or one current transformers, integrated network analyzer and residual current control in the installation. Combined with the ability to program alarm states, the MULTI PFR is a great tool for regulation and preventative maintenance too. This ensures maximum control and security of installation.

Characteristics

- Unit for regulation of 6 and 12 steps
- Integrated power analyzer and controlling residual leakage currents
- RS-485 communication interface with Modbus RTU protocol
- Alarms – for example temperature (fan relay), operating states, indicates the risk of the presence of harmonics etc.

PFC Controllers

Technical features

PFR6 / PFR12	
Measurement	THD
Temperature measurement	no
Alarm output	yes
FCP system	yes
Interface	no
4 quadrant PFC	yes
Supply and measuring voltage	400 VAC (+15%/-10%), 50 / 60 Hz
Current measurement circuit	CT, IN / 5
Accuracy of voltage measurement	1%
Accuracy of current measurement	1%
Accuracy of cos measurement	±2%
Display	1 line, 3 digits, 7 segments, 20 icons
Output	relays, max. 250 V, 10 A, AC1
Protection degree	IP 51
Dimensions	144 x 144 x 62 mm
Connection	12 - steps regulator

PFC CONTROLLER PFR6 / PFR12

PFR6/PFR12 is the type of power factor regulator designed for easy and effective regulation. Regulator monitors the power system status and accurately and quickly takes decisions on the connection or disconnection of compensation stages in order to reach the preset target cos phi.

Capacitor Switching Contactors

Capacitor switching contactors CC

CC Capacitor Contactors are suitable for switching low-inductive and low-loss capacitors in capacitor banks, without and with reactors.
CC Capacitor Contactors are designed to meet Capacitor Duty application. Contactors are fitted with block of three early make auxiliary contacts in series with six quick discharge damping resistors - 2 per phase. These auxiliary contacts limit peak current in first stage of switching. Subsequently the nominal current is transferred through main contacts which are switched in next stage and the auxiliary contacts are switched-off at the same time.

The main features

- Electrical life
- Reduced watt loss during 'ON' condition, saves energy
- Switching of Capacitor bank in parallel without de-rating

Technical features

Complete contactor block (contactor + resistors)	Power (kvar)			Rated current (A) at 400 V/50 Hz	Frequency of switching (per hour)	Electrical endurance (operations)	Auxiliary contacts	Dimensions W x D x H (mm) Including damping resistors
	230 V	400 - 440 V	660 - 690 V					
CC 10 N 02	5	10	15	14	240	250 000	2 NC	45 x 100 x 120
CC 12 N 02	6,7	12,5	18	18	240	250 000	2 NC	45 x 100 x 120
CC 15 N 02	8,5	15	22	22	240	250 000	2 NC	45 x 100 x 120
CC 20 N 01	11	20	30	29	120	175 000	1 NC	45 x 100 x 120
CC 25 N 01	14	25	35	36	120	125 000	1 NC	45 x 100 x 133
CC 30 N 01	20	30	40	44	120	125 000	1 NC	45 x 100 x 133
CC 40 N 01	25	40	58	58	100	125 000	1 NC	55 x 120 x 162
CC 50 N 01	29	50	70	72	100	125 000	1 NC	55 x 120 x 162
CC 60 N 01	32	60	80	87	100	125 000	1 NC	55 x 120 x 162
CC 70 N 01	35	70	90	101	100	100 000	1 NC	70 x 142,5 x 180
CC 80 N 01	45	80	115	116	100	100 000	1 NC	70 x 142,5 x 180

Capacitor switching contactors K3

Contactors K3-..K are suitable for switching low-inductive and low loss capacitors in capacitor banks (IEC 70 and 831, VDE 0560) without and with reactors.
Capacitor switching contactors are fitted with early make contacts and damping resistors, to reduce the value of make current < 70 x Ie.

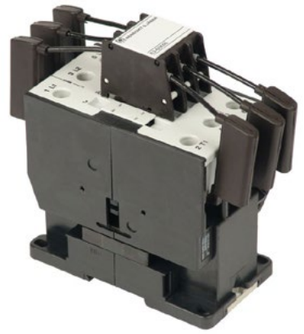

Operating conditions

Capacitor switching contactors are protected against contact welding for a prospective making current of 200 x Ie. Fuse rating approx. 1,6 to 2,5 x Ie, type gL (gG).

Technical Data

Acc. to IEC 947-4-1, IEC 947-5-1, EN 60947-4-1, EN 60947-5-1, VDE 0660

Technical features

Complete contactor block (contactor + resistors)	Power (kvar)			Rated current (A)	Frequency of switching (per hour)	Electrical endurance (switching)	Auxiliary contacts	Dimensions W x D x H (mm) Including damping resistors
	280 V - 400 V	415 - 440 V	660 - 690 V					
K3-18NK10 230	10	13	20	18	240	250 000	1 NO	45 x 85 x 98
K3-18NK01 230	12,5	13	20	18	240	250 000	1 NC	45 x 85 x 98
K3-24K00 230	20	22	33	28	240	150 000	-	45 x 115 x 119,5
K3-32K00 230	25	27	41	35	240	150 000	-	45 x 115 x 119,5
K3-50K00 230	33,3	36	55	48	120	150 000	-	60 x 145 x 128,5
K3-62K00 230	50	53	82	72	120	150 000	-	60 x 145 x 128,5
K3-74K00 230	75	75	120	105	80	120 000	-	60 x 145 x 128,5
K3-90K00 230	80	82	120	115	80	120 000	-	90 x 155 x 152,5
K3-115K00 230	100	103	148	144	80	120 000	-	90 x 155 x 152,5

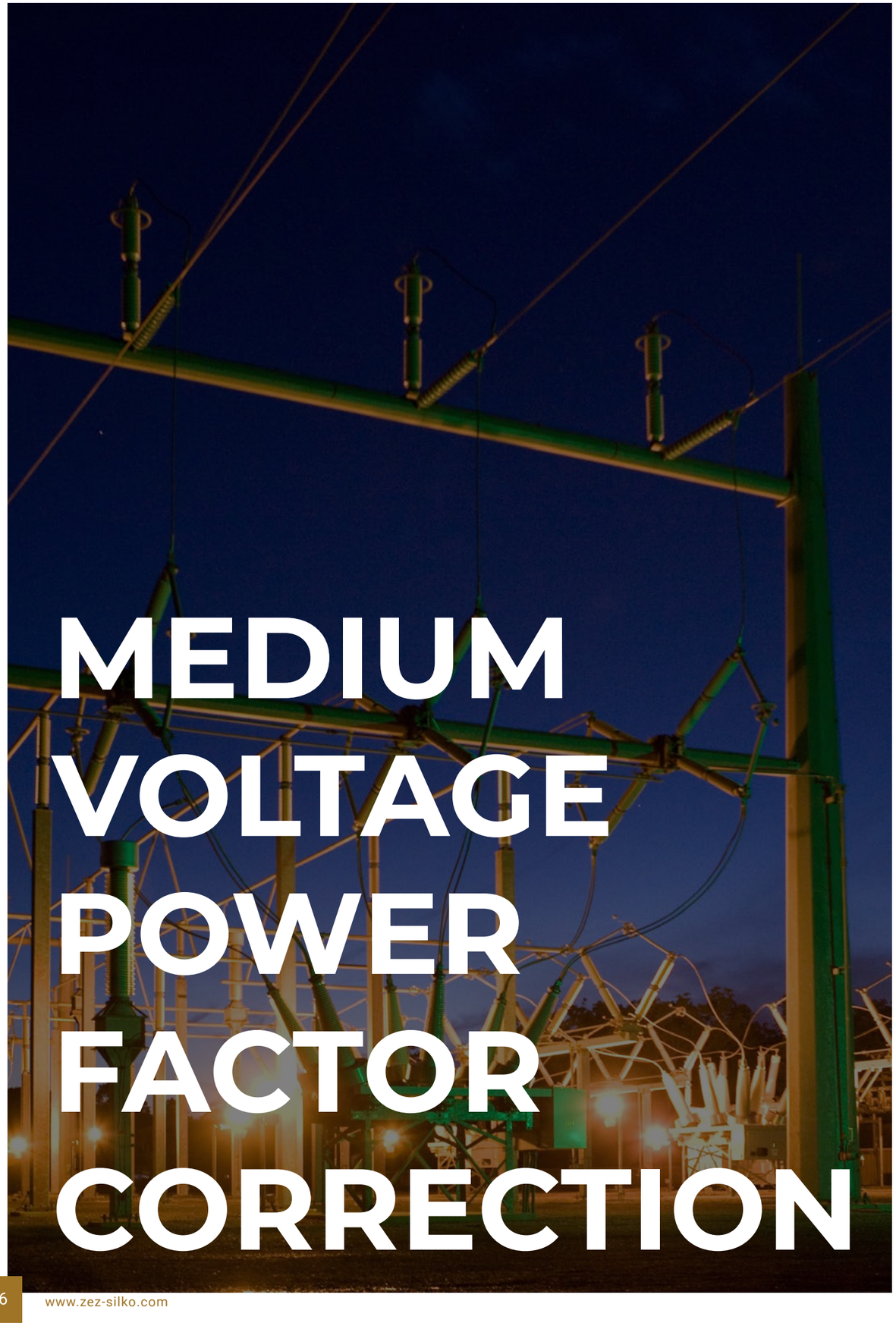

MEDIUM VOLTAGE POWER FACTOR CORRECTION

Basics characteristics and application

- Output up to 1000 kvar
- For outdoor/indoor installation
- Without or with internal fuses for higher reliability
- Surface treatment against corrosion
- 100% routine tests
- Voltage and output rating as required by customer
- Single phase capacitors with two or three outputs

Power factor correction

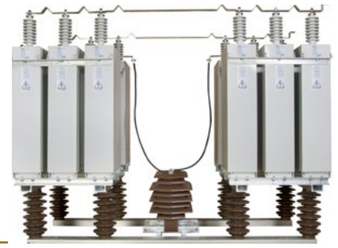

Filtering of harmonics

Ripple control coupling capacitors

Surge capacitors for generators and transformers

Low-frequency induction heating

MV Power Capacitors

General technical parameters

Standards	IEC 60871-1, EN 60871-1, GOST 1282-88
Rated voltage	1 - phase: 1 - 24 kV 3 - phase: 1 - 15 kV
Rated power	25 - 1000 kvar
Rated frequency	50 / 60 Hz
Capacitance tolerance	-5 / +10 %
Test voltage terminal - terminal	2 x U_N AC / 10 s or 4 x U_N DC / 10 s
Test voltage terminal - case	according to the insulation level / 10 s
Max. permissible current	1,5 x I_N
Inrush current	300 x I_N
Capacitor losses	cca 0,2 W / kvar (dielectric 0,06 W / kvar)
Discharge resistors	built-in 75 V / 10 min
Statistical life expectancy	> 150 000 hours under standard conditions
Protection degree	IP 00
Temperature category	-25 / C - other on request
Max. relative humidity	95 %
Cooling	Natural Air
Max. altitude	4 000 m
Mounting position	Vertical or horizontal (narrow side)
Case	Stainless - steel
Dielectric system	all - film
Impregnant	Jarylec (environmentally - friendly, non - toxic, non - PCB)

Construction

MV capacitors are manufactured with all-film technology. The dielectric is polypropylene foil impregnated with synthetic liquid known under the trade name JARYLEC, which is harmless to health and environmentally friendly. Electrodes are made of aluminum foil. This construction ensures extremely low losses of capacitors.

Internal interconnection is in the case of three-phase units to the star and is marked with "Y", for single-phase it is "I". The units have built-in internal discharge resistors reducing the voltage to 75 V within 10 minutes. The three-phase and single-phase units are in fully insulated containers.

Approximate dimensions and weight

1-PHASE CAPACITORS, VOLTAGE UP TO 13,86 kV, NO FUSES

OUTPUT at 50Hz (kvar)	OUTPUT at 60Hz (kvar)	WEIGHT (kg)	CASE DIMENSIONS L x W x H (mm)
50	60	18	350 x 145 x 180
100	120	19	350 x 145 x 250
150	180	27	350 x 145 x 330
200	240	33	350 x 145 x 420
250	300	37	350 x 145 x 480
300	360	41	350 x 145 x 550
350	420	44	350 x 175 x 500
400	480	49	350 x 175 x 570
450	540	54	350 x 175 x 640
500	600	60	350 x 175 x 710
550	660	62	350 x 175 x 740
600	720	67	350 x 175 x 810
650	780	73	350 x 200 x 770
700	840	76	350 x 200 x 830
750	900	80	350 x 200 x 870
800	960	84	350 x 200 x 910
1000	1200	102	350 x 200 x 1130

3-PHASE CAPACITORS, VOLTAGE UP TO 12 kV, NO FUSES

OUTPUT at 50Hz (kvar)	OUTPUT at 60Hz (kvar)	WEIGHT (kg)	CASE DIMENSIONS L x W x H (mm)
50	60	15	350 x 145 x 180
100	120	20	350 x 145 x 250
150	180	25	350 x 145 x 330
200	240	31	350 x 145 x 420
250	300	34	350 x 145 x 480
300	360	39	350 x 145 x 550
350	420	45	350 x 175 x 500
400	480	47	350 x 175 x 570
450	540	52	350 x 175 x 640
500	600	57	350 x 175 x 710
550	660	60	350 x 175 x 740
600	720	65	350 x 175 x 810
650	780	68	350 x 200 x 770
700	840	73	350 x 200 x 830
750	900	78	350 x 200 x 870
800	960	81	350 x 200 x 910
1000	1200	100	350 x 200 x 1130

Options

- Internal fuses
- Overpressure sensor
- M16 terminals
- Faster discharge resistors (50V/5min)
- Live case

Installation instructions

- The bushings must not be mechanically stressed
- Keep a minimum distance of 60 mm between capacitors
- Device must be discharged before manipulation with capacitors and the terminals must be short-circuited
- Max. torque for clamping bolt of insulators M12 is 20/25 Nm
- Check all electric connections and visually check the tightness of the capacitors after several days of operation

Internal fuses

The function of internal fuses is isolating a faulty element from the others to allow further function of the capacitor unit. For further capacitor function it's necessary to take into account capacitance change of the capacitor.
The internal fuses in capacitor are restricted with the energy contained in the each internal section. This energy is very important for secure disconnection of the fuse in the case of fault inside any element. For their proper function there is important that capacitor has sufficient energy for save disconnection of the fuse. On the other hand the fuses must not disconnect during switching (on and off) of the unit.
Both types of capacitors (internally fused or not) would be equipped with correctly selected external fuses.

Single phase units (CUEFS & CUFFS)

UN	->U_{GRID}	25	50	75	100	150	200	250	300	350	400	450	500	550	600	650	700	750	800	850	900	950	1000
kV	kV	kvar																					
1	1,73	N.A.	Y	Y	Y	Y																	
2	3,46	N.A.	Y	Y	Y	Y	Y	Y	Y														
2,3	3,98	N.A.	Y	Y	Y	Y	Y	Y	Y	Y													
2,5	4,33	N.A.	N.A.	N.A.	Y	Y	Y	Y	Y	Y													
3,3	5,72	N.A.	N.A.	N.A.	Y	Y	Y	Y	Y	Y	Y	Y	Y										
4,16	7,21	N.A.	N.A.	N.A.	Y	Y	Y	Y	Y	Y	Y	Y	Y	Y	Y								
4,4	7,62	N.A.	N.A.	N.A.	Y	Y	Y	Y	Y	Y	Y	Y	Y	Y	Y	Y							
4,6	7,97	N.A.	N.A.	N.A.	Y	Y	Y	Y	Y	Y	Y	Y	Y	Y	Y	Y	Y						
5,77	9,99	N.A.	N.A.	N.A.	N.A.	Y	Y	Y	Y	Y	Y	Y	Y	Y	Y	Y	Y	Y	Y	Y	Y		
6,93	12,00	N.A.	N.A.	N.A.	N.A.	Y	Y	Y	Y	Y	Y	Y	Y	Y	Y	Y	Y	Y	Y	Y	Y		
7,2	12,47	N.A.	N.A.	N.A.	N.A.	N.A.	Y	Y	Y	Y	Y	Y	Y	Y	Y	Y	Y	Y	Y	Y	Y		
7,35	12,73	N.A.	N.A.	N.A.	N.A.	N.A.	Y	Y	Y	Y	Y	Y	Y	Y	Y	Y	Y	Y	Y	Y	Y		
8,9	15,42	N.A.	N.A.	N.A.	N.A.	N.A.	Y	Y	Y	Y	Y	Y	Y	Y	Y	Y	Y	Y	Y	Y	Y		
9,2	15,93	N.A.	N.A.	N.A.	N.A.	N.A.	Y	Y	Y	Y	Y	Y	Y	Y	Y	Y	Y	Y	Y	Y	Y		
9,4	16,28	N.A.	N.A.	N.A.	N.A.	N.A.	N.A.	Y	Y	Y	Y	Y	Y	Y	Y	Y	Y	Y	Y	Y	Y		
10,1	17,49	N.A.	N.A.	N.A.	N.A.	N.A.	N.A.	Y	Y	Y	Y	Y	Y	Y	Y	Y	Y	Y	Y	Y	Y		
11,56	20,02	N.A.	N.A.	N.A.	N.A.	N.A.	N.A.	Y	Y	Y	Y	Y	Y	Y	Y	Y	Y	Y	Y	Y	Y		
12,7	22,00	N.A.	N.A.	N.A.	N.A.	N.A.	N.A.	N.A.	Y	Y	Y	Y	Y	Y	Y	Y	Y	Y	Y	Y	Y		
13,86	24,01	N.A.	N.A.	N.A.	N.A.	N.A.	N.A.	N.A.	Y	Y	Y	Y	Y	Y	Y	Y	Y	Y	Y	Y	Y		
14,25	24,68	N.A.	N.A.	N.A.	N.A.	N.A.	N.A.	N.A.	Y	Y	Y	Y	Y	Y	Y	Y	Y	Y	Y	Y	Y		
15,2	26,33	N.A.	N.A.	N.A.	N.A.	N.A.	N.A.	N.A.	Y	Y	Y	Y	Y	Y	Y	Y	Y	Y	Y	Y	Y		
16,6	28,75	N.A.	N.A.	N.A.	N.A.	N.A.	N.A.	N.A.	N.A.	Y	Y	Y	Y	Y	Y	Y	Y	Y	Y	Y	Y		
17,2	29,79	N.A.	N.A.	N.A.	N.A.	N.A.	N.A.	N.A.	N.A.	Y	Y	Y	Y	Y	Y	Y	Y	Y	Y	Y	Y		
18,4	31,87	N.A.	N.A.	N.A.	N.A.	N.A.	N.A.	N.A.	N.A.	Y	Y	Y	Y	Y	Y	Y	Y	Y	Y	Y	Y		
19,05	33,00	N.A.	N.A.	N.A.	N.A.	N.A.	N.A.	N.A.	N.A.	N.A.	Y	Y	Y	Y	Y	Y	Y	Y	Y	Y	Y		
20,7	35,85	N.A.	N.A.	N.A.	N.A.	N.A.	N.A.	N.A.	N.A.	N.A.	Y	Y	Y	Y	Y								
21	36,37	N.A.	N.A.	N.A.	N.A.	N.A.	N.A.	N.A.	N.A.	N.A.	Y	Y	Y	Y	Y								

(double or triple units in common case ready for BIL 10/40

Three phase units (CPEFS) - Star connection (Y)

U_N	50	100	150	200	250	300	350	400	450	500	550	600	650	700	750	800	850	900	950	1000
kV	kvar																			
1	N.A.	N.A.	Y	Y	Y															
2	N.A.	N.A.	Y	Y	Y	Y	Y	Y	Y	Y										
4	N.A.	N.A.	Y	Y	Y	Y	Y	Y	Y	Y	Y	Y	Y	Y	Y	Y	Y	Y		
4,1	N.A.	N.A.	N.A.	N.A.	Y	Y	Y	Y	Y	Y	Y	Y	Y	Y	Y	Y	Y	Y		
8	N.A.	N.A.	N.A.	N.A.	Y	Y	Y	Y	Y	Y	Y	Y	Y	Y	Y	Y	Y	Y		
9,1	N.A.	N.A.	N.A.	N.A.	N.A.	N.A.	N.A.	Y	Y	Y	Y	Y	Y	Y	Y	Y	Y	Y		
12	N.A.	N.A.	N.A.	N.A.	N.A.	N.A.	N.A.	Y	Y	Y	Y	Y	Y	Y	Y	Y	Y	Y		

Y - internal fuses possible
N.A. - internal fuses not available

Values close to the border line can be calculated on request.

The proper function of capacitor is ensured only if the specifications and conditions (voltage, current, temperature, correct installation, maintenance) are observed. Failure to meet and/or exceed these conditions may result in bursting of the capacitor case or even explosion and subsequent fire.

Standard insulation levels

Highest voltage for equipment U_m (RMS)	(kV)	2,4	3,6	7,2	12	17,5	24	36	52
Rated power-frequency short duration withstand voltage (RMS)	(kV)	8	10	20	28	38	50	70	95
Rated lightning impulse withstand voltage (peak)	(kV)	35	40	60	75	95	125	170	200

Bushings

Type	Creepage (mm)	Insulating level (kV)	No. of skirts	L1 (mm)	L2 (mm)	Type of stud (D)
M1	260	28/75	6	124	36	M12
K2	190	28/75	4	148	45 55	M12 M16
K3	305	38/95	6	212	45 55	M12 M16
K4	458	50/125	8	250	45 55	M12 M16
K5	686	70/170	11	275	45 55	M12 M16

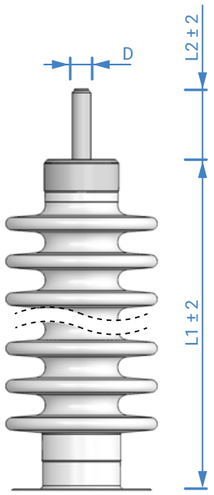

Kx

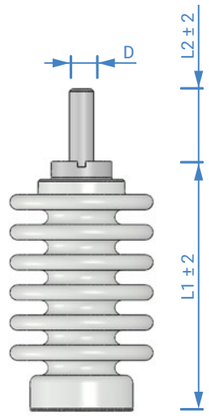

M1

Max. permissible voltage

RMS Overvoltage	Max. period
1,10 x U_N	12 hours/day
1,15 x U_N	30 min/day
1,20 x U_N	5 min
1,30 x U_N	1 min

Temperature categories

Temperature Category	Ambient temperature		
	Max.	24 hours*	1 year*
C	50°C	40°C	30°C
D	55°C	45°C	35°C

* Max. mean value during period

CPEFS - Three phase unit, up to 12kV

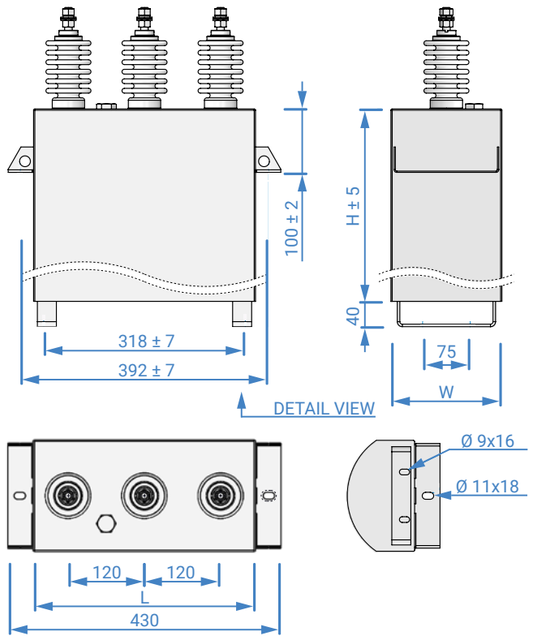

CPEFS - Three phase unit, up to 15kV

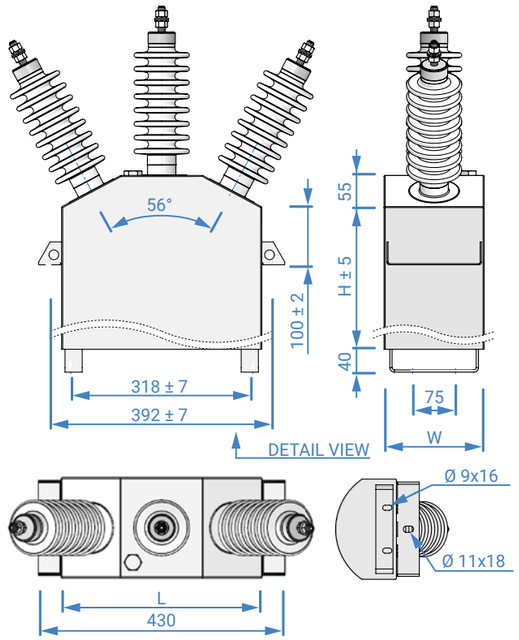

CUEFS - single phase type, insulated case

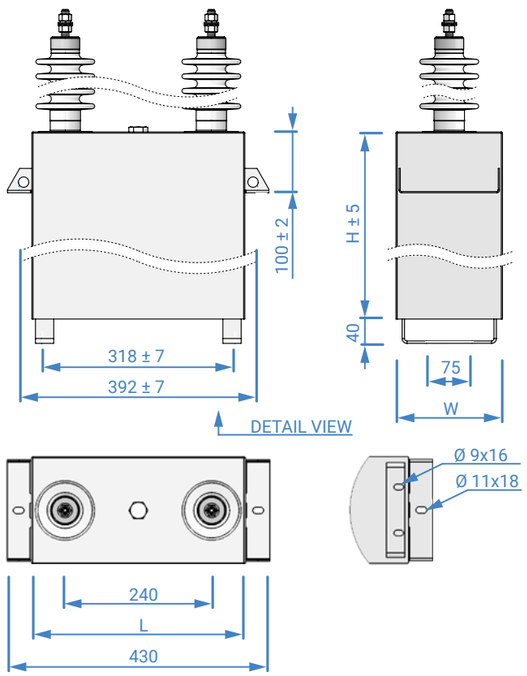

CUFFS - Single phase type, live case

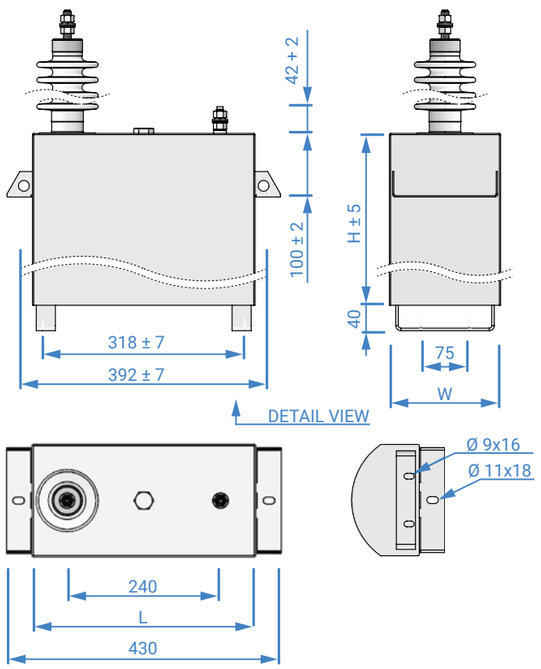

MV Detuning Reactors

Standard design is intended for detuned capacitor banks. Reactors have high linearity, low losses and minimal noise. Inductance is fixed to the exact value with tolerance of –1/+3%. Reactors are designed for capacitors at 7200 V (grid 6000 V) and 12000 V (grid 10000 V), 50 Hz and tuned to resonance frequency of 189 Hz. Reactors are wound on Fe core with insulation class „B“.

Function of reactors

- Limiting inrush current during switching of capacitors.
- Limiting resonance and protection of capacitor banks against over loading arising form higher harmonics.
- Avoiding loss of power frequency (power remote control) from general power company.
- Getting power resonance circuits tuned to higher harmonic frequencies.

7 200 V, 189 Hz (7 %)

Type	Capacitor power Q_N (kvar)	Inductance L_N (mH)	Current I_N (A)	Dimensions (WxDxH mm)	Weight (kg)
150-189/6000/7200	150	77,0	12	955 x 425 x 650	185
300-189/6000/7200	300	38,5	24	1215 x 475 x 700	267
600-189/6000/7200	600	19,25	48	1175 x 500 x 770	356

12 000 V, 189 Hz (7 %)

Type	Capacitor power Q_N (kvar)	Inductance L_N (mH)	Current I_N (A)	Dimensions (WxDxH mm)	Weight (kg)
150-189/10000/12000	150	213,8	6,85	845 x 425 x 800	194
300-189/10000/12000	300	106,9	13,7	1050 x 500 x 840	307
600-189/10000/12000	600	53,4	27,4	1380 x 525 x 890	448

Other specifications (voltage, power, frequency) are available on request.

MV Inrush Current Reactors

Standard design is intended for high voltage capacitor banks as protection against very high peak currents during switching (inrush current). Max rated voltage 40 kV, max rated current 250 A. Standard rated voltage 7,2 and 12 kV. Insulation class is „F“.

Temperature class: F
Cooling: AN
Protection degree: IP 00

Type	U_N (kV)	I_N (A)	L_{TL} (mH)	Outer dimensions (mm)			Mounting holes span (mm)			Weight (kg)
				A	B	C	D	E	Ø	
IC reactor 7,2 kV, 50 A, 0,05 mH	7,2	50	0,05	397	400	357	337	349	11	16,2
IC reactor 7,2 kV, 50 A, 0,1 mH	7,2	50	0,1	397	450	390	337	374	11	19,3
IC reactor 7,2 kV, 100 A, 0,05 mH	7,2	100	0,05	465	430	397	405	362	11	22,9
IC reactor 7,2 kV, 100 A, 0,1 mH	7,2	100	0,1	491	500	416	405	386	11	28,7
IC reactor 7,2 kV, 150 A, 0,05 mH	7,2	150	0,05	405	520	450	345	433	11	35,4
IC reactor 7,2 kV, 200 A, 0,1 mH	7,2	200	0,1	473	600	480	413	465	11	57,1
IC reactor 12 kV, 100 A, 0,1 mH	12	100	0,1	650	480	447	590	399	11	35,4
IC reactor 12 kV, 150 A, 0,1 mH	12	150	0,1	657	520	464	597	411	11	47,8
IC reactor 12 kV, 200 A, 0,1 mH	12	200	0,1	650	560	498	590	450	11	57,4

Other specifications (voltage, power, frequency) are available on request.

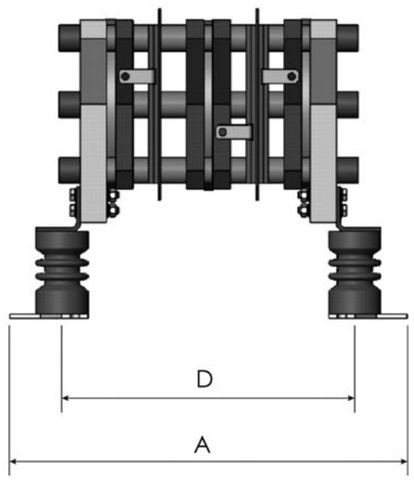

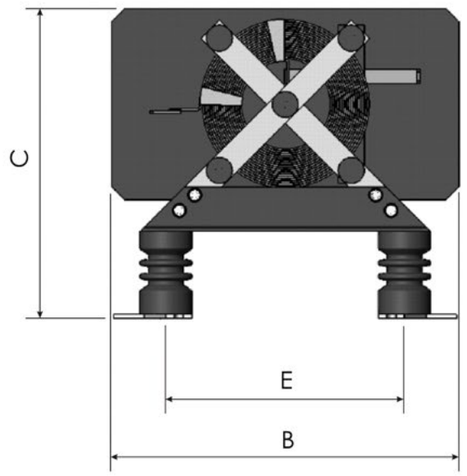

MV Vacuum Contactor

VC contactors are specifically designed for industrial applications where large number of operations is required. Usual using is for switching the capacitors. This VC vacuum contactor is optimal for capacitor banks from 3,3 up to 6,6 kV.

Technical features

- vacuum, extinguishing method
- perfect control of the electrical arc in capacitive operations
- very long life expectancy
- well insulated equipment made up of three independent vacuum poles in an insulated structure
- small size
- optimized weight
- easy maintenance

Technical data

Electrical data	
Auxiliary voltage	220 V AC standard, 110 VAC or DC on request
Rated voltage	6,6 kV
Rated current	400 A
Breaking capacity	4 kA
Frequency	50 / 60 Hz
Insulation voltage	7,2 kV
Category	AC 3
No. of operations	300 000
Max. operating power	2 000 kvar at 6,6 kV
Assembly features	
Connections	fixed
Dimensions	385 x 398 x 247 mm
Weight	24 kg
Standards	IEC 62271

MV Instrument Transformers

These instruments current and voltage transformers are intended for measuring and protection of high voltage distribution systems of the indoor as well as outdoor type. These instruments transformers are intended for the voltage system from 3,6 kV up to 40,5 kV. The transformers comply with requirements of IEC 60044-1, IEC 60044-2, GOST 1983-89 and DIN 42600/1983.

Current transformers

Type	Voltage (kV)	Primary current (A)	Secondary current (A)	Power (VA)	Weight (kg)	outdoor / indoor
CTO 38	40,5	5 - 2500	5 (1)	5 - 60	62	outdoor
CTO 15	25	5 - 600	5 (1)	5 - 60	30	outdoor
CTS 12	17,5	5 - 3200	5 (1)	5 - 60	22	indoor
CTS 25	25	5 - 3200	5 (1)	5 - 60	28	indoor

Voltage transformers

Type	Voltage (kV)	Primary voltage (kV)	Secondary voltage (V)	Power (VA)	No. of insulators	Weight (kg)	outdoor / indoor
VPT 25	25	3 - 22	100, 110, 120	10 - 150	2	49	outdoor
VPT 38	40,5	3 - 35	100, 110, 120	10 - 150	2	62	outdoor
VTO 15	17,5	5,77 - 8,66	58, 63, 69	30 - 150	1	24	outdoor
VTO 38	40,5	1,732 - 20,2	58, 63, 69	10 - 150	1	49	outdoor
VTS 12	17,5	1,73 - 8,66	58, 63, 69	10 - 150	1	21	indoor
VTS 25	25	1,73 - 12,7	58, 63, 69	10 - 150	1	29	indoor
VTS 38	40,5	1,73 - 20,2	58, 63, 69	10 - 150	1	33	indoor
VTD 12	17,5	3 - 15	100, 110, 120	10 - 150	2	22	indoor
VTD 25	25	3 - 22	100, 110, 120	10 - 150	2	29	indoor

LV Capacitor Banks

Automatic capacitor banks type QR are used for the power factor correction of inductive character loads in low voltage power networks. Substation switchgears are used in different application as: distribution, control, supply, motor, lightning, measuring switchgears.
Capacitor banks are designed in steel-plate cabinets (vertical construction mounted type by smaller power ranges). The banks are equipped with automatic PFC regulator, switching contactors, cylindrical capacitors ZEZ SILKO (MKP capacitors, dry type), fuses. Main switch is installed in all banks (three-phase circuit breaker or fuse switch).

See catalogue "CAPACITOR BANKS, SWITCHBOARDS"

Standard power ranges

Type	Power	
QRC	5,45 - 34,4 kvar	wall-mounted
QRN	21,9 - 87,5 kvar	wall-mounted
QRS	93,75 - 150 kvar	wall-mounted
QRV	100 - 500 kvar	standard
QRG	425 - 1200 kvar	standard
QRF	68,75 - 1000 kvar	detuned
QRFR	50 - 800 kvar	fast-switched
QRH	up to 4000 A	substation

MV Capacitor Banks

Capacitor banks type SCA, SCB and ACB are used for individual or central power factor correction in medium voltage power networks.
Capacitor banks are designed in steel-plate cabinets (SCB, ACB) or on steel frames (SCA) according to requirements of the customer specifications.
Standard construction of the bank includes ZEZ SILKO MV capacitors (three-phase units or single-phase units in star connection, alternatively single-phase units in double-star connection), set of three fuse-bases with fuses. According to the requirement it is possible to include also inrush current reactors or other protection and measuring elements (unbalance relay, detuning reactor, current transformer,...).

See catalogue "CAPACITOR BANKS, SWITCHBOARDS"

Technical data

	SCB, ACB	SCA
Voltage	up to 36 kV	up to 100 kV
Power rating:	on request	on request

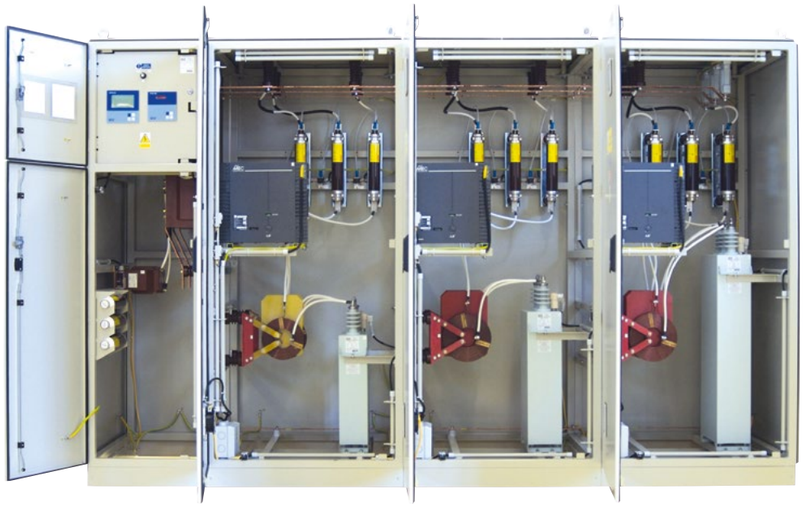

VISIT OUR WEB

WWW.ZEZ-SILKO.COM

ZEZ SILKO, s.r.o.

Pod Černým lesem 683
564 01 Žamberk
Czech Republic

+420 465 673 111
zez@zez-silko.cz

All rights reserved. Product specifications are subject to change without notice. The information in this catalog only describes the types of products manufactured and cannot be considered as binding characteristics. This catalog replaces the previous edition.

© Copyright 2020 ZEZ SILKO, s.r.o.