Measurement & Control Instruments

Process Control
Temperature Control
Heating Cooling
Counters
Timers

EMKO
www.emkoelektronik.com.tr

Process Controllers

"Smart I/O Module" System
RS-232/485 Modbus RTU Serial Communication

ESM-4450 ESM-4950
ESM-7750 ESM-9450 ESM-9950

- 8 steps profile control (Ramp & Soak) function and start-hold-stop by using logic input module
- For process value and process control Retransmission feature
- Detection of heater failure by using 0...5Adc CT input module
- Universal process input (TC, RTD, mVdc, Vdc, mAdc)
- Bumpless transfer
- Motorized valve control function

Specifications

4 Digits process (PV) and 4 Digits set (SV) display
Programmable heating, cooling and alarm functions for control outputs
Auto-tune and Self-tune PID
Dual or multi point calibration for dc Voltage/Current input
Configurable ON/OFF, P, PI, PD, and PID control forms

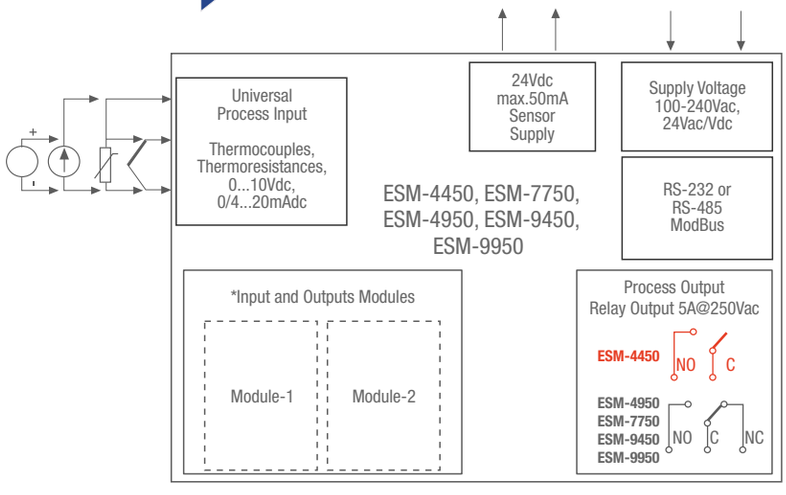

* Input and output modules can be mounted each module sockets.
* Only one analog input module can connect to the device at the same time.

Technical Specification

Accuracy: ±0.25%of full scale for thermocouple, thermoresistance, mV, V ±0.70% of full scale for mA input
Cold Junction Compensation: Automatically ± 0.1°C/1°C
Line Compensation: Maximum 10 Ohm
Sensor Break Protection: Upscale
Sampling Cycle: 3 samples per second
Input Filter: 0.0 to 900.0 seconds

. A . 20 . D . 1 / FG . HI / 0 . 0 . 0 . 0

ESM-4450 (48x48x116 mm)
ESM-7750 (72x72x87,5 mm)
ESM-4950 (96x48x86,5 mm)
ESM-9450 (48x96x86,5 mm)
ESM-9950 (96x96x87,5 mm)

A Supply Voltage
- 1 100-240Vac (-15%; +10%) 50/60 Hz
- 2 24Vac (-15%;+10%) 50/60 Hz
  24Vdc (-15%; +10%)

BC Input
- 20 Universal Input: TC, RTD, dc Voltage/Current
  Thermocouple (TC): L(DIN 43710), J, K, B, E and N(IEC584.1) (ITS90), C(ITS90)
  Thermoresistance (RTD): PT-100, (IEC 751) (ITS90)

D Serial Communication
- 1 RS-232 ModBus RTU
- 2 RS-485 ModBus RTU

Input/Output Modules FG / HI
- Relay Output Module 01
- SSR Driver Output Module 02
- Digital(Transistor) Output Module 03
- Current Output Module (04...20mAdc veya 0...10Vdc) 04
- Digital Input Module 07
- 0/4...20 mAdc Current Input Module 08
- 0...5Aac CT Input Module 09
- TC or (0...50mVdc) Input Module 10
- PT-100 Input Module 11
- 0...10Vdc Input Module 12

Process Output **E**
- Standard Relay Output: (5A @ 250Vac) 1

Process Controllers

Universal Input Dual SET PID

ESM-7730 ESM-4430
ESM-9930 ESM-9430 ESM-4930

- Auto-tune and Self-tune PID
- Bumpless transfer
- Dual or multi point calibration for dc Voltage/Current input

Specifications

4 Digits process (PV) and 4 Digits set (SV) display
Universal process input (TC, RTD, mVdc, Vdc, mAdc)
Configurable ON/OFF, P, PI, PD, and PID control forms
Manual/Automatic mode selection for control outputs
Programmable heating, cooling and alarm functions for control outputs

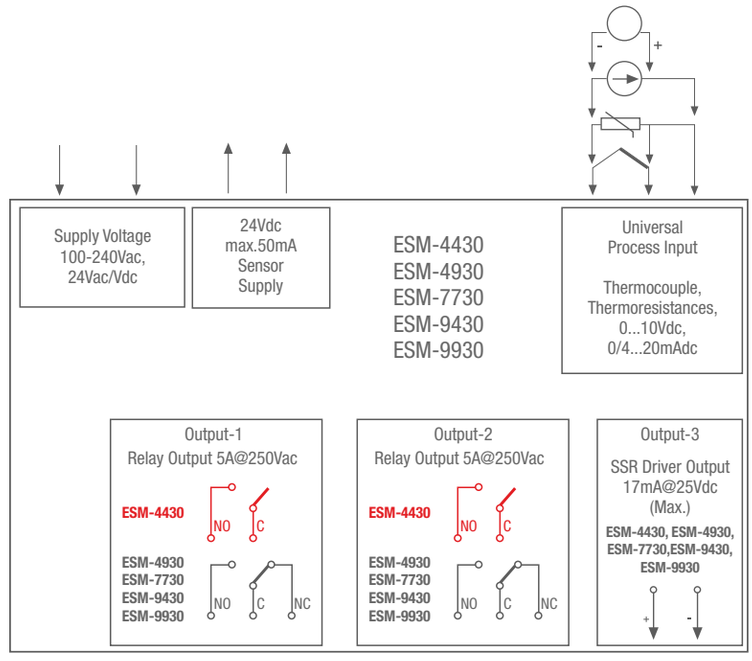

Technical Specification

Accuracy: ±0.25%of full scale for thermocouple, thermoresistance, mV, V ±0.70% of full scale for mA input
Cold Junction Compensation: Automatically ± 0.1°C/1°C
Line Compensation: Maximum 10 Ohm
Sensor Break Protection: Upscale
Sampling Cycle: 3 samples per second
Input Filter: 0.0 to 900.0 seconds

INPUT X1 | OUT PUT X3 | Basic Process | PID CONTROL
96x96 | 48x96 | 72x72 | 96x48 | 48x48

. A . 20 . 0 . 1 / 01 . 02 / 0 . 0 . 0 . 0

ESM-4430 (48x48x87,5 mm)
ESM-7730 (72x72x87,5 mm)
ESM-9930 (96x96x87,5 mm)
ESM-9430 (48x96x86, 5 mm)
ESM-4930 (96x48x86,5 mm)

A Supply Voltage
1 100-240Vac (-15%; +10%) 50/60 Hz
2 24Vac 50/60 Hz (-15%;+10%)
24Vdc (-15%; +10%)

Output-3 (Process) HI
SSR Driver Output (Max. 17mA, 25Vdc) 02

Output-2 (Process and Alarm) FG
Relay Output (5A @ 250Vac) 01

Output-1 (Alarm) E
Relay Output (5A @ 250Vac) 1

Input BC
Universal Input: TC, RTD, dc Voltage/Current
Thermocouple (TC): L(DIN 43710), J, K, R, S, T, B, E and N(IEC584.1) (ITS90), C(ITS90)
Thermoresistance (RTD): PT-100, (IEC 751) (ITS90) 20

Process Indicators

"Smart Output Module'' System RS-232/485
Modbus RTU Serial Communication

ESM-4400 ESM-4900
ESM-7700 ESM-9900

- Smart Output Module System
- Dual or multi point calibration for dc Voltage/Current input
- Retransmission of Process Value or Process Control by using 0/4...20 mAdc Current Output Module

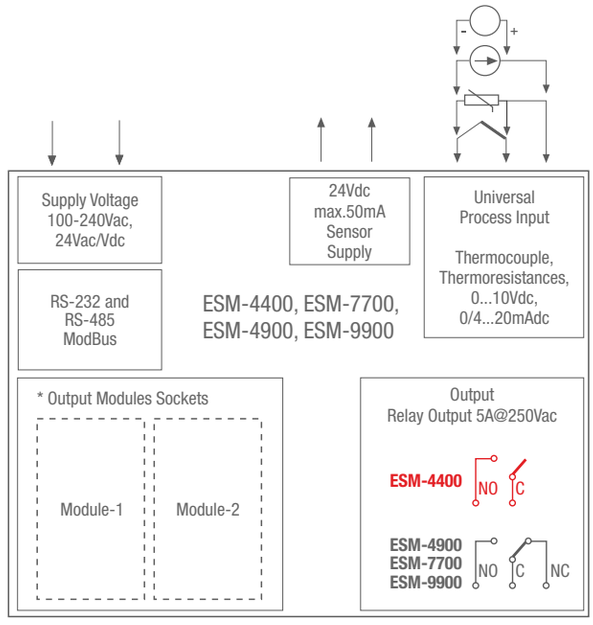

* Output modules can be mounted each modules sockets.

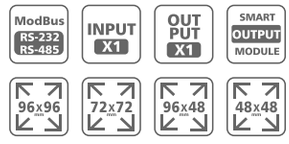

Specifications

4 Digit process (PV) display
Universal process input (TC, RTD, mVdc, Vdc, mAdc)
Programmable Alarm functions
RS-232 (standart) or RS-485(Optional) serial communication with Modbus RTU protocol

Technical Specification

Accuracy: ±0.25%of full scale for thermocouple, thermoresistance, mV, V ±0.70% of full scale for mA input
Cold Junction Compensation: Automatically ± 0.1°C/1°C
Line Compensation: Maximum 10 Ohm
Sensor Break Protection: Upscale
Sampling Cycle: 3 samples per second
Input Filter: 0.0 to 900.0 seconds

[ ] . A . 20 . D . 1 / FG . HI / 0 . 0 . 0 . 0

ESM-4400 (48x48x116 mm)
ESM-7700 (72x72x87,5 mm)
ESM-4900 (96x48x86,5 mm)
ESM-9900 (48x96x87,5 mm)

A Supply Voltage
1 100-240Vac (-15%; +10%) 50/60 Hz
2 24Vac (-15%;+10%) 50/60 Hz
24Vdc (-15%; +10%)

BC Input
20 Universal Input: TC, RTD, dc Voltage/Current
Thermocouple (TC): L(DIN 43710), J, K, B, E and N(IEC584.1) (ITS90), C(ITS90)
Thermoresistance (RTD): PT-100, (IEC 751) (ITS90)

D Serial Communication
1 RS-232 ModBus RTU
2 RS-485 ModBus RTU

Output Modules FG / HI
None 00
Relay Output Module 01
SSR Driver Output Module (max.26mA @ 22Vdc) 02
Digital (Transistor) Output Module (max.40mA@18Vdc) 03
Current Output Module (04...20mAdc veya 0...10Vdc) 04

Process Output E
Standard Relay Output: (5A @ 250Vac) 1

Process Indicators

ESM 3700-N

CE EAC

- Adjustable decimal point
- 5 Stage analog input filter option
- Maximum and minimum measurement value are registered to the devices memory
- Maximum or minimum measurement value van be shown continuously on the display

Specifications

4 Digits display
Easily adjustable from front panel
Configurable display scale between -1999 and 9999
Selectable universal process Input
(0-10Vdc, 0-1Vdc, 0-60mVdc, 0-20mAdc, 4-20mAdc)
User can be adjust device's reading value for selected input type
Alarm output, Relay or SSR driver output (It must be determined in order)
Adjustable alarm set value from front panel
Programming mode password protection
Installing parameters using ProkeyRemote acces, data collecting and controlling with Modbus RTU

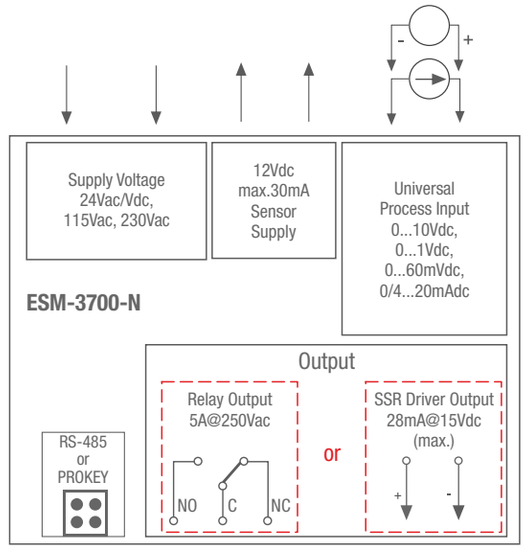

Technical Specification

Accuracy: ±0.5%of full scale
Cold Junction Compensation: Automatic ± 0.1°C/1°C
Line Compensation: Maximum 10 Ohm
Sensor Break Protection: Upscale
Sampling Time: 240 ms for 4...20 mAdc and 0...20 mAdc process input
130 ms for 0...60 mVdc process Input
100 ms for 0...1 Vdc and 0...10 Vdc process Input
Input filter: 0.0..900.0 selectable between seconds

INPUT X1 | OUT PUT X1 | Basic Process | ModBus RS-485 | 77x35

ESM 3700-N . A . 20 . 0 . E / 00 . 00 / 0 . 0 . 0 . 0

ESM 3700-N (77x35x62,5 mm)

A Supply Voltage
- 2 24Vac/dc (-15%; +10%) 50/60 Hz
- 3 24Vac (-15%; +10%) 50/60 Hz
- 4 115Vac (-15%;+10%) 50/60 Hz
- 5 230Vac (-15%;+10%) 50/60 Hz

Input Type (DC Voltage/Current) 20
- 0...60 mVdc Scale /-1999, 9999
- 0...1 Vdc Scale /-1999, 9999
- 0...10 Vdc Scale /-1999, 9999
- 0...20 mAdc Scale / -1999, 9999
- 4...20 mAdc Scale / -1999, 9999

20

Alarm Output E
- None 0
- Relay Output (5A @ 250Vac, 1NO + 1NC) 1
- SSR Drive Output Module (Maximum 28mA @ 15Vdc) 2

Process Controllers

Universal Input Dual SET PID

ESM-4435

- Universal process input (TC, RTD, mVdc, Vdc, mAdc)
- Dual or multi point calibration for dc Voltage/Current input
- Bumpless transfer
- Auto-tune ve Self-tune PID

Specifications

4 Digits process (PV) and 4 Digits set (SV) display
Configurable ON/OFF, P, PI, PD, and PID control forms
Manual/Automatic mode selection for control outputs
Programmable heating, cooling and alarm functions for control outputs

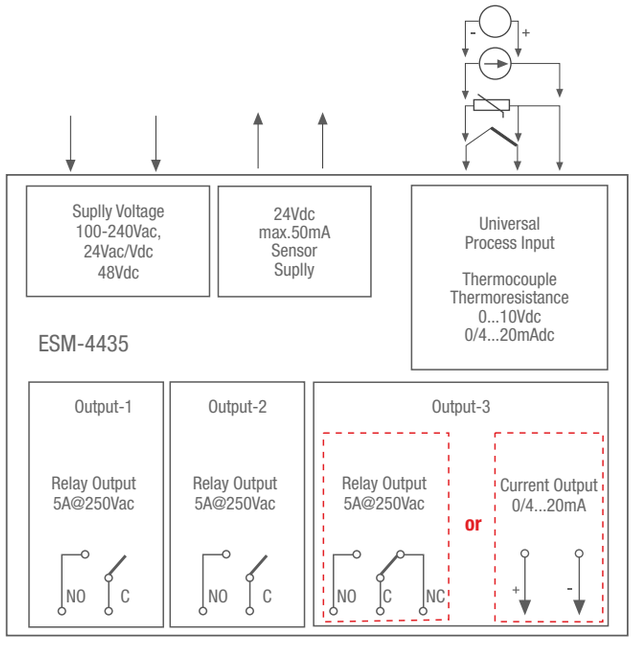

Technical Specification

Accuracy: ±0.25%of full scale for thermocouple, thermoresistance, mV, V ±0.70% of full scale for mA input
Cold Junction Compensation: Automatically ± 0.1°C/1°C
Line Compensation: Maximum 10 Ohm
Sensor Break Protection: Upscale
Sampling Cycle: 3 samples per second
Input Filter: 0.0 to 900.0 seconds

INPUT X1 | OUTPUT X3 | PID CONTROL | 48x48 | Basic Process

ESM-4435 . A . 20 . 0 . 1 / 01 . HI / 0 . 0 . 0 . 0

ESM-4435
(48x48x87, 5 mm)

A	Supply Voltage
1	100-240 Vac (-15%; +10%) 50/60 Hz
2	24Vac (-15%;+10%) 50/60 Hz or 24Vdc (-15%;+10%) 50/60 Hz
9	48Vdc (-15%;+10%)
BC	Input
20	Universal Input: TC, RTD, dc Voltage/Current Thermocouple (TC): L(DIN 43710), J, K, R, S, T, B, E and N(IEC584.1) (ITS90), C(ITS90) Thermoresistance (RTD): PT-100, (IEC 751) (ITS90)

Output-3 HI
Relay Output 5A @ 250Vac 01
Current Output (0/4...20mA Vdc ; 0/2 to 10 Vdc) 04

Output-2 FG
Relay Output 5A @ 250Vac 01

Output-1 E
Relay Output 5A @ 250Vac 1

Order Code

A	BC	D	E	/	FG	HI	/	U	V	W	Z
	20		1	/			/	0	0	0	0

		ESM-4450	ESM-4950	ESM-7750	ESM-9450	ESM-9950	ESM-4430	ESM-4930	ESM-7730	ESM-9430	ESM-9930	ESM-4435	ESM-4400	ESM-4900	ESM-7700	ESM-9900	ESM-3700-N
A	Supply Voltage																
1	100...240 Vac (-15%,+10%)50/60Hz	+	+	+	+	+	+	+	+	+	+	+	+	+	+	+	-
2	24Vdc/Vac (-15%,+15%) 50/60Hz	+	+	+	+	+	+	+	+	+	+	+	+	+	+	+	+
3	24Vac (-15%,+15%) 50/60Hz	-	-	-	-	-	-	-	-	-	-	-	-	-	-	-	+
4	115Vac (-15%,+15%) 50/60Hz	-	-	-	-	-	-	-	-	-	-	-	-	-	-	-	+
5	230Vac (-15%,+15%) 50/60Hz	-	-	-	-	-	-	-	-	-	-	-	-	-	-	-	+
9	48Vdc (-15%,+10%) 50/60Hz	-	-	-	-	-	-	-	-	-	-	+	-	-	-	-	-
BC	Input Type																
20	Configurable Universal inputs	+	+	+	+	+	+	+	+	+	+	+	+	+	+	+	+
D	Serial Communication																
0	None						+	+	+	+	+	+					+
1	RS-232 ModBus RTU	+	+	+	+	+	-	-	-	-	-	-	+	+	+	+	-
2	RS-485 ModBus RTU	+	+	+	+	+	-	-	-	-	-	-	+	+	+	+	-
E	Process Output																
0	None																+
1	Relay Output (At resistive load 5A@250Vac)	+	+	+	+	+	+	+	+	+	+	+	+	+	+	+	+
2	SSR Driver Output (Max. 20mA@12Vdc)	-	-	-	-	-	-	-	-	-	-	-	-	-	-	-	+
FG	Input/Output Modules-1																
00	None	+	+	+	+	+							+	+	+	+	+
01	Relay Output	+	+	+	+	+	+	+	+	+	+	+	+	+	+	+	-
02	SSR Driver Output (Max. 20mA@12Vdc)	+	+	+	+	+	-	-	-	-	-	-	+	+	+	+	-
03	Transistor Output (Max. 40mA@18Vdc)	+	+	+	+	+	-	-	-	-	-	-	+	+	+	+	-
04	Analogue (0/4...20mAdc or 0...10Vdc)	+	+	+	+	+	-	-	-	-	-	-	+	+	+	+	-
07	Digital Input	+	+	+	+	+	-	-	-	-	-	-	-	-	-	-	-
08	Analogue (0/4...20mAdc)	+	+	+	+	+	-	-	-	-	-	-	-	-	-	-	-
09	CT Input Module (0...5Aac)	+	+	+	+	+	-	-	-	-	-	-	-	-	-	-	-
10	Thermocouple Input (0...50mVdc)	+	+	+	+	+	-	-	-	-	-	-	-	-	-	-	-
11	Pt-100 Input	+	+	+	+	+	-	-	-	-	-	-	-	-	-	-	-
12	Analogue Input (0...10Vdc)	+	+	+	+	+	-	-	-	-	-	-	-	-	-	-	-
HI	Input/Output Module - 2																
00	None	+	+	+	+	+							+	+	+	+	+
01	Relay Output	+	+	+	+	+	-	-	-	-	-	+	+	+	+	+	-
02	SSR Driver Output (Max. 20mA@12Vdc)	+	+	+	+	+	+	+	+	+	+	-	+	+	+	+	-
03	Transistor Output (Max. 40mA@18Vdc)	+	+	+	+	+	-	-	-	-	-	-	+	+	+	+	-
04	Analogue (0/4...20mAdc or 0...10Vdc)	+	+	+	+	+	-	-	-	-	-	+	+	+	+	+	-
07	Digital Input	+	+	+	+	+	-	-	-	-	-	-	-	-	-	-	-
08	Analogue (0/4...20mAdc)	+	+	+	+	+	-	-	-	-	-	-	-	-	-	-	-
09	CT Input Module (0...5Aac)	+	+	+	+	+	-	-	-	-	-	-	-	-	-	-	-
10	Thermocouple Input (0...50mVdc)	+	+	+	+	+	-	-	-	-	-	-	-	-	-	-	-
11	Pt-100 Input	+	+	+	+	+	-	-	-	-	-	-	-	-	-	-	-
12	Analogue Input (0...10Vdc)	+	+	+	+	+	-	-	-	-	-	-	-	-	-	-	-
Specifications																	
"Smart I/O Modül'' system		+	+	+	+	+	-	-	-	-	-	-	-	-	-	-	-
"Smart Output Modül'' system		+	+	+	+	+	-	-	-	-	-	-	+	+	+	+	-
Universal process (TC, RTD, mVdc, Vdc, mAdc) input		+	+	+	+	+	+	+	+	+	+	+	+	+	+	+	-
Bumpless transfer		+	+	+	+	+	+	+	+	+	+	+	-	-	-	-	-
Motorized valve control function		+	+	+	+	+	-	-	-	-	-	-	-	-	-	-	-
8 steps profile control		+	+	+	+	+	-	-	-	-	-	-	-	-	-	-	-
Remote Set point function		+	+	+	+	+	-	-	-	-	-	-	-	-	-	-	-
Re-transmission function		+	+	+	+	+	-	-	-	-	-	-	+	+	+	+	-
Detection of heater failure by CT input module		+	+	+	+	+	-	-	-	-	-	-	-	-	-	-	-
Dimension																	
77x35mm DIN		-	-	-	-	-	-	-	-	-	-	-	-	-	-	-	+
48x48mm DIN 1/16		+	-	-	-	-	+	-	-	-	-	+	+	-	-	-	-
96x48mm DIN 1/8		-	+	-	-	-	-	+	-	-	-	-	-	+	-	-	-
72x72mm DIN		-	-	+	-	-	-	-	+	-	-	-	-	-	+	-	-
48x96mm DIN 1/8		-	-	-	+	-	-	-	-	+	-	-	-	-	-	-	-
96x96mm DIN 1/4		-	-	-	-	+	-	-	-	-	+	-	-	-	-	+	-

Profile Control

ESM-9990

- Universal process input (TC, RTD, mVdc, Vdc, mAdc)
- In ceramic furnace applications
- 8-step Profile Control (Ramp and Soak) and Start-Pause-Stop functions
- Textile, paint, ceramic oven applications

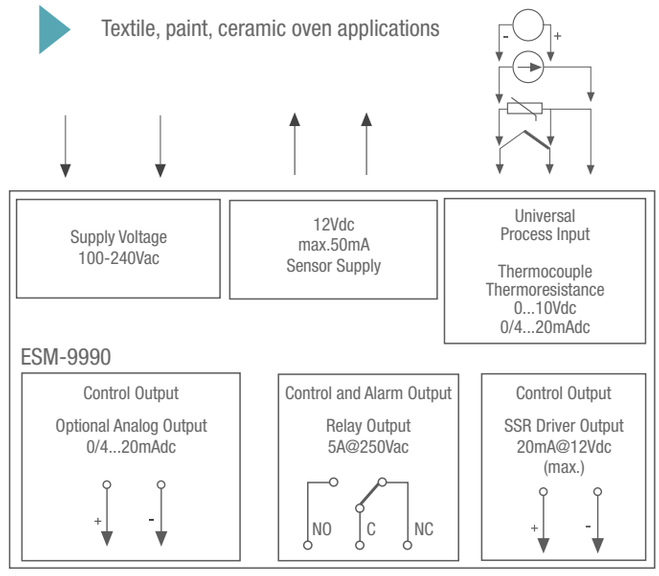

Specifications

4 Digits proses (PV) ve 4 Digits set (SV) göstergesi
Hardware configuration with SSR and Current output module
Configurable ON/OFF, P, PI, PD and PID control forms
Heating function for control outputs
8 steps profile control (Ramp & Soak) function and Start-Pause-Stop
Power Down Back-up

Technical Specification

Accuracy: ± 0,25% of FS for thermocouple
Cold Junction Compensation: Automatically ± 0.1°C/1°C.
Sensor Break Protection: Upscale
Sampling Cycle: 3 samples per second

INPUT X1 | OUT PUT X2 | CONTROL | 96x96

ESM-9990 . 1 . 20 . 0 . 1 / 02 . HI / 1 . 0 . 0 . 0

ESM-9990
(96x96x96 mm)

A Supply Voltage
1 100-240Vac (-15%;+10%) 50/60 Hz

BC Input
20 Universal Input: TC, RTD, dc Voltage/Current
Thermocouple (TC): L(DIN 43710), J, K, R, S, T, B, E and N(IEC584.1) (ITS90), C(ITS90)
Thermoresistance (RTD): PT-100, (IEC 751) (ITS90)

Control Output HI
None 0
Current Output Module (0/4...20mA Vdc) 02

Control Output FG
SSR Driver Output Module (Max.20mA @18Vdc) 02

Control and Alarm Output E
Relay Output 5A @ 250Vac 1

Digital Potantiometer

EPM-3790N / EPR-3790N

CE EAC

EPM-3790N
Forward, Reverse direction outputs and error input for V/F Speed Controller

EPR-3790N
Fault input or (Remote start-stop)

Specifications

Operation at Adjustable Set Value
Ramp Function
Economical
Easy to User
4 Digits Display
Easily adjustable set value from front panel
Configurable display scale between -1999 and 9999
Adjustable decimal point
Set value low limit and set value high limit boundaries
Adjustable ramp up and ramp down time
0/2...10Vdc Voltage output or 0/4...20mAdc Current output
(It must be determined in order.)
Password protection for programming and adjustment sections

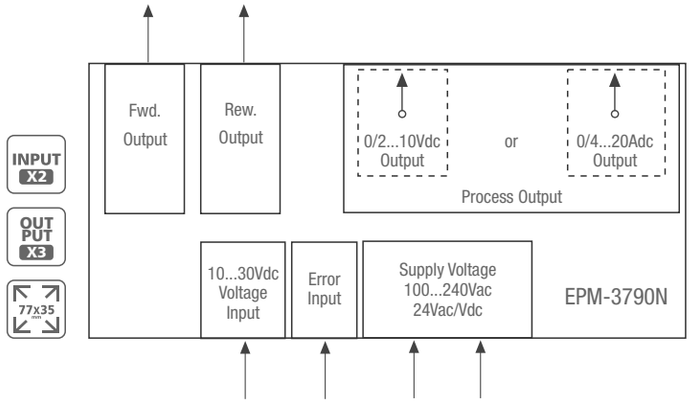

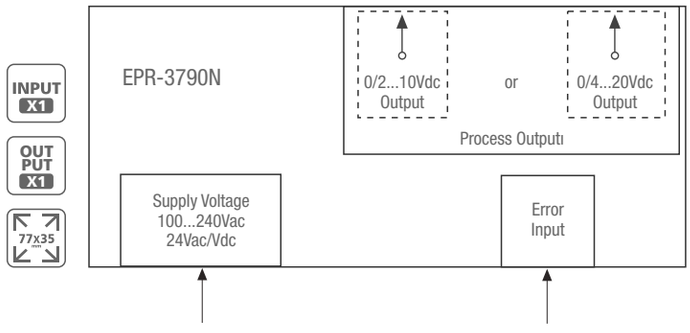

Technical Specification

Digital Input: Error input (max. 3mA@30Vdc)
Resolution: 12 bits
Fluctuation: Max. 30 mV
Scale: Between-1999 and 9999

. A . BC . 0 . E / 00 . 00 / 1 . 0 . 0 . 0

EPM-3790N (77x35x62,5mm)
EPR-3790N (77x35x62,5mm)

A Power Supply
2 24Vac/dc (±15%) 50/60Hz
3 24Vac (±15%) 50/60Hz
4 115Vac (±15%) 50/60Hz
5 230Vac (±15%) 50/60Hz
8 10 - 30Vdc

Output E
Current Output (0/4...20mA) 4
Voltage Output (0/2...10V Maks. 10mA) 5

8 Channel Scanner

Channel 8N - Channel 8AN

- 320 x 240 Pixel TFT LCD screen
- 3 Different alarm and pre-alarm types for each channel (High, Low and Band Alarms)
- ModBus RTU communication protocol (RS-232, RS-485 and Ethernet communication)
- Relay or (pnp "source") transistor output

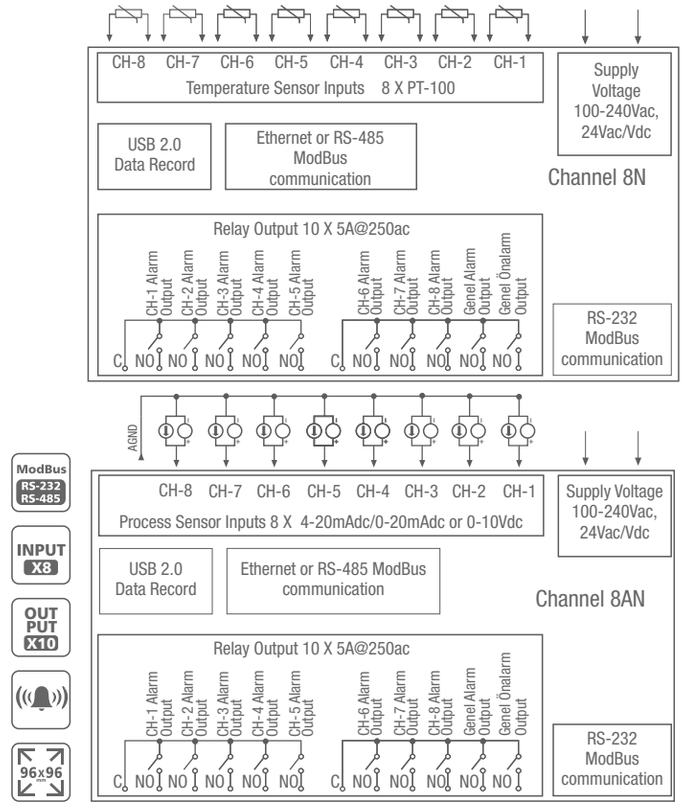

Specifications

8 Analogue inputs
8 PT-100 input with two wires
ON-OFF control
Sensor error detection
Adjustable offset
User defined channel labels
Display scan modes
Operating with Real Time Clock (RTC)
Data Logging to USB Flash Memory
Adjustable data logging time interval
Password protection for programming mode

Technical Specification

Accuracy: ± 0,25% of full scale
Line Compensation: Maximum 10 Ohm
Sensor Break Protection: Upscale
Sampling Time: 400msecs

. A . B . 2 D . E

Channel 8N (96x96x96 mm)
Channel 8AN (96x96x96 mm)

A Supply Voltage
1 100-240Vac 50/60 Hz (-15%; +10%)-6VA Universal
2 24Vac 50/60 Hz (-15%;+10%) 24Vdc (-15%; +10%)

B Outputs
R 10 Relay outputs with 2 common
for each NO contact 5A max. (5A@250V at resistive load)
for each Common contact 15A max (15A@250V at resistive load)

Optional Communication-2 E
None 0
USB (USB2.0 "for temperature data logging") U

Optional Communication-1 D
None 0
RS-485 (up to 115200 baudrate, "500VAC isolation") 4
ETHERNET (10Mbit/s, "1500VAC isolation") E

Standard Serial Communication C
USB (USB2.0 "for temperature data logging") 2

4 Zone PID Control

PID QUADRO

CE EAC

- Auto-Tuning and Self-Tuning (Automatic calculations of PID parameters)
- Data Logging to USB Flash Memory
- Soft-Start (Ramp action during power on) specification
- 3 Different alarm types for each channel (High, Low and Band Alarms)

Specifications

128 x 64 Graphical LCD display
- 4 Thermocouple (J, K, L, R or S type) sensor inputs
- Configurable P, PI, PD and PID control forms
- Relay or (pnp "source") transistor outputs

Sensor error detection
Adjustable temperature offset for each channel
User defined channel labels
Operating with Real Time Clock (RTC)
ModBus RTU communication protocol
(RS-232, RS-485 and Ethernet communication)
Adjustable data logging time interval
Password protection for programming mode

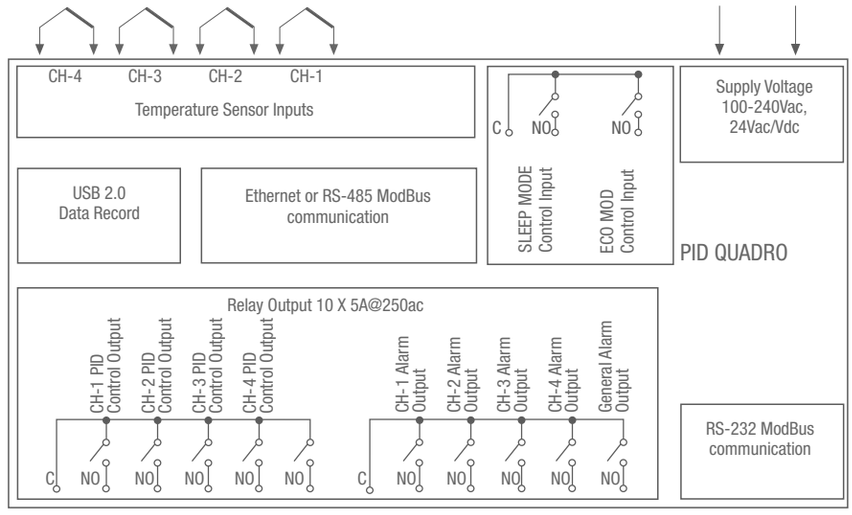

Technical Specification

Accuracy: ± 0,25% of full scale
Line Compensation: Maximum 10 Ohm
Sensor Break Protection: Upscale
Sampling Time: 1400msecs

PID QUADRO . A . B . C . D . E

PID QUADRO (96x96x96 mm)

A Supply Voltage
- 1 100-240Vac 50/60 Hz (-15%; +10%)-6VA Universal
- 2 24Vac 50/60 Hz (-15%;+10%) 24Vdc (-15%; +10%)

B Outputs
- R 10 Relay outputs with 2 common
  for each NO contact 5A max. (5A@250V at resistive load)
  for each Common contact 15A max (15A@250V at resistive load)

Optional Communication-2 E
- None 0
- USB (USB2.0 'for temperature data recording') U

Optional Communication-1 D
- None 0
- RS-485 (maximum 115200 baudrate, '500VAC isolation') 4
- ETHERNET (10Mbit/s, '1500VAC isolation') E

Standard Serial Communication C
- RS-232 (maximum 115200 baudrate, 'isolation') 2

Temperature and Humidity Controller

ESM-3723

With Buzzer

CE EAC

- Temperature Sensor Input (NTC, PTC, PT-100 and ProNem Mini PMI-P)
- Humidity Sensor Input (0/2..10V, 0/4..20mA or ProHumidity Mini PMI-D)
- Auto-Tune PID
- 4 Digits Temperature and 4 Digit Humidity Display

Specifications

Heating Control Output, Heating Alarm Output
Humidity Control Output, Humidity Alarm Output
PID or ON/OFF selectable temperature control
Set Value Boundaries
Alarm parameters and alarm status can be adjusted
according to the audible alert (internal buzzer functions for alarm conditions)
Password protection for programming section

Technical Specification

ESM-3723 Measurement range

0°C...100°C (PTC, NTC, Pt-100),
0°C...100°C (PT100),
-20°C...80°C(ProNem Mini PMI-P)

Accuracy: Scale ±%1, **Sensor Break Protection:** Upscale

Sampling Cycle: 3 samples per second **Conrol Form:** ON/OFF, PID

Pronem Mini Measurement range

Measurement range (RH): 0...100 %RH
Measurement range (T): -20°C...+80°C

Accuracy (RH): +/-2 %RH (Typ)@23°C

Accuracy (T): +/-0,3°C (Typ)@23°C

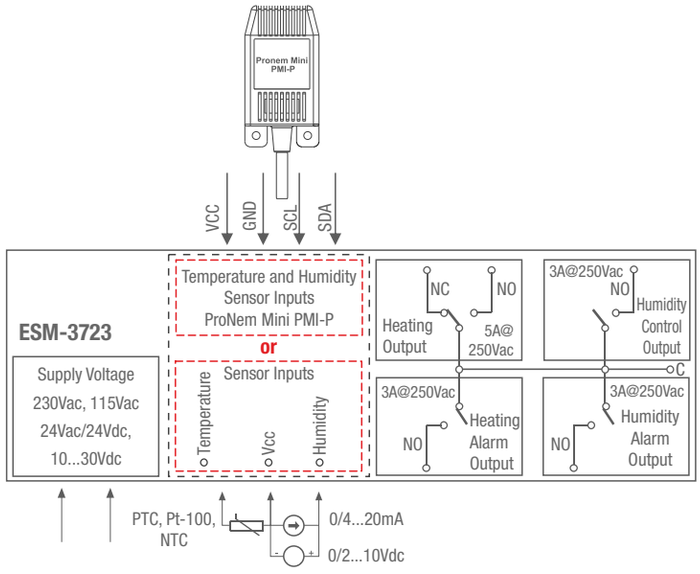

ESM-3723 . A . B . C . 0 . E / 01 . 01 / 1 . V . 0 . 0

ESM-3723
(76x34,5x71 mm)

A Supply Voltage
- 2 24Vac/dc 50/60 Hz (-15%; +10%)
- 3 24Vac 50/60 Hz (-15%; +10%)
- 4 115Vac 50/60 Hz (-15%;+10%)
- 5 230Vac 50/60 Hz (-15%;+10%)
- 8 10..30Vdc 1.5W

B Temperature Sensor Input
- 1 PT 100, IEC751(ITS90)
- 2 PTC
- 3 NTC
- 4 0/2..10Vdc Voltage Input
- 5 0/4..20mA Current Input
- 6 ProNem Mini PMI-P

C Humidity Sensor Input
- 4 0/2..10Vdc Voltage Input
- 5 0/4..20mA Current Input
- 6 ProNem Mini PMI-P

E Process Output
- 1 Heating Control: Relay (5A @ 250Vac)
- 2 SSR Driver output (Maximum 30mA @ 15Vdc)

Humidity Output (3A@250Vac) 01

Humidity Output FG

Relay (3A@250Vac) 01

Heating Alarm Output HI

Relay (3A@250Vac) 1

Humidity Alarm Output U

V
- PTC-M6L40.K1.5 (PTC Air Probe 1.5 m silicon cable) 1
- PTCS-M6L30.K1.5.1/8" (PTC Liquid Probe with 1.5 m silicon cable) 2
- NTC-M5L20.K1.5 (NTC Probe thermoplastic moulded with 1.5m cable for cooling application) 3
- NTC-M6L50.K1.5 (Metal protective tubular, 1.5 m wired NTC probe) 4
- ProNem Mini PMI-P (2.5m cable for Temperature and Humidity application) 6

Digital Ammeter

EDA-3700

CE EAC

- AC, DC or True RMS measuring feature
- Remote access,data collecting and controlling with Modbus RTU

Specifications

Easily changeable from front panel
5A or 60 mV AC, DC, AC/DC input
Programmable scale from 5A to 9999A
Alarm parameters
Password protection for programming mode
Having CE mark according to European Norms

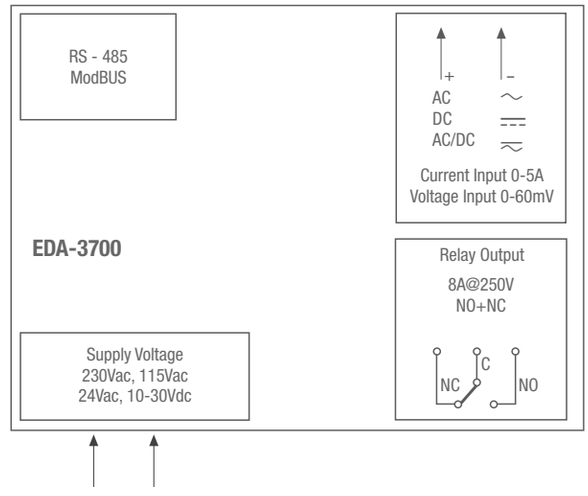

Technical Specification

Physical properties: 76 mm x 34.5 mm x71 mm Plastic for panel mounting protection. Panel section 71 x 29 mm.
Protection Class : NEMA 4X (Ip65 at front, Ip20 at rear)
Accuracy: Scale ±%1,
Reading frequency : According to parameter value, **Control Form:** ON/OFF
Storage / Operating Temperature :-30 °C to +80 °C / -20 °C to +70°C
Storage / Operating Humidity : 90 % max. (None condensing)
Environmental Ratings : Standard, indoor at an altitude of less than 2000 meters with none condensing humidity.
Scale : AC ve RMS 0 - 9999 / DC (-1999) - 9999
Display : 14 mm Red 4 digits LED Display

ModBus RS-485 | INPUT X1 | OUT PUT X1 | 77x35

EDA-3700 . A . 09 . D . E / 00 . 00 / 0 . 0 . 0 . 0

EDA - 3700
(76x34,5x71 mm)

Relay Output E
Alarm Output None 0
Relay Output: (8A @ 250Vac) 1

Input D
None 0
RS-485 (insulated) ModBus RTU 1

Input BC
Analog Input Type 09

A Supply Voltage
3 24Vac 50/60 Hz 1,5V
4 115Vac 50/60 Hz 1,5V
5 230Vac 50/60 Hz 1,5V
8 10 /30 Vdc

Temperature Controllers

Single SET Digital On/Off

ESM-3710-N

With Buzzer

CE EAC

- Installing parameters using Prokey
- Password protection for programming section
- Remote acces, data collecting and controlling with Modbus RTU
- Adjustable internal buzzer according to sensor defect status

Specifications

4 Digits Display
NTC Input or PTC Input or
J type thermocouple Input or Ktype thermocouple Input or
2-Wire PT-100 Input ori 2-Wire PT-1000 Input (Must be determined in order.)
Adjustable temperature offset
ON/OFF temperature control
Selectable heating or cooling function
Selection of operation with hysteresis
Adjustable temperature offset
Set value low limit and set value high limit boundaries
Operation selection of compressor operates continously,
stops or operates periodically in case of sensor defect
Compressor protection delays

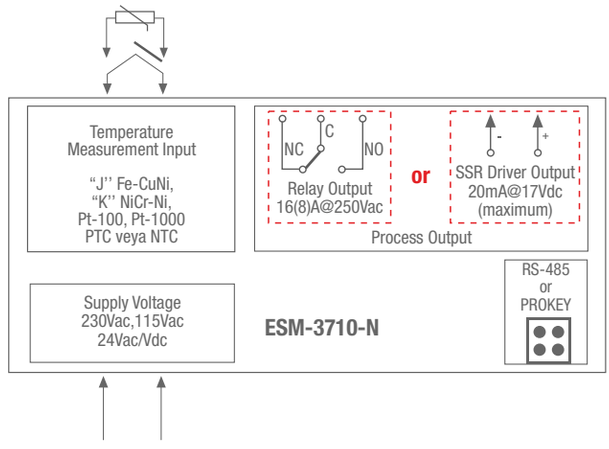

Technical Specification

Accuracy: ±1%of scale
Cold Junction Compensation: Automatically ± 0.1°C/1°C
Sensor Break Protection: Upscale
Sampling Cycle: 3 samples per second

ESM-3710-N . A . BC . 0 . E / 00 . 00 / 1 . V . 0 . 0

ESM-3710-N (76x34,5x71 mm)

A Supply Voltage
- 2 24Vac/dc (-15%;+10%) 50/60 Hz -1.5VA
- 3 24Vac (±15%) 50/60 Hz -1.5VA
- 4 115Vac (±15%) 50/60 Hz -1.5VA
- 5 230Vac (±15%) 50/60 Hz -1.5VA
- 8 10-30Vdc(±15%) 50/60 Hz

BC Input
- 05 J, Fe CuNi IEC584.1(ITS90)
- 10 K, NiCr Ni IEC584.1(ITS90)
- 11 Pt 100, (-50...400°C)
- 09 Pt 100, (-19.9...99.9°C)
- 12 PTC (-50....150°C)
- 14 Pt 1000, (-50...400°C)
- 13 Pt 1000, (-19.9...99.9°C)
- 18 NTC (-50...100°C)

V
- 1 PTC-M6L40.K1.5 (PTC Air Probe with 1.5 m silicon cable)
- 2 PTCS-M6L30.K1.5.1/8" (PTC Liquid Probe with 1.5 m silicon cable)
- 3 NTC-M5L20.K1.5 (NTC Probe, thermoplastic moulded with 1.5 m cable for cooling application)
- 4 NTC-M6L50.K1.5 (Metal protective tubular, 1.5 m wired NTC probe)

Process Output E
- 1 Relay Output: (16(8)A @ 250Vac)
- 2 SSR Driver Output (Maximum 20mA @ 17Vdc)
- 3 Relay Output (30(15)A@240Vac,1 NO (Only for NTC input type devices.)

Temperature Controller

DIN RAIL Mounting Digital On/Off

ESM-1510-N

CE EAC

DIN RAIL Mounting

Heating / Cooling Applications

Specifications

3 Digits display
PTC, NTC PT-100, PT-1000 thermoresesistances input types
Fe-Const (J), NiCr-Ni (K) thermocouples input types (Must be determined in order)
ON/OFF Temperature Control
Selectable Heating or Cooling Function
Adjustable Temperature Offset Value
Set Value Boundaries
Relay or SSR Driver Output
Operation selection of compressor operates continuously,
stops or operates periodically in case of probe defect
Compressor Protection Times
Password Protection for Programming Section

Technical Specification

Accuracy: ±1%of scale
Cold Junction Compensation: Automatically ± 0.1°C/1°C
Sensor Break Protection: Upscale
Sampling Cycle: 3 samples per second

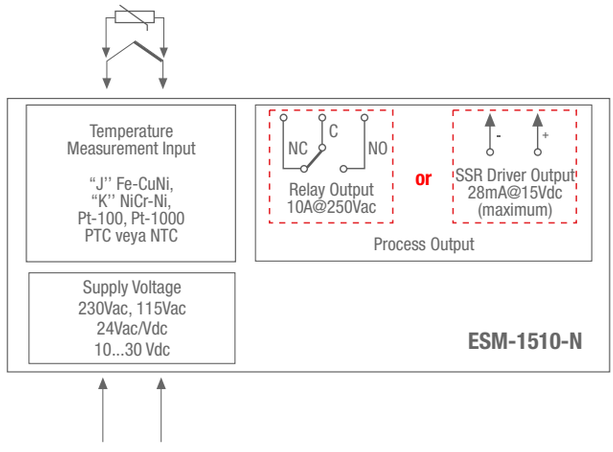

INPUT X1 | OUT PUT X1 | DIN RAIL

ESM-1510-N . A . BC . 0 . E / 00 . 00 / 2 . V . 0 . 0

ESM-1510-N (90x35x61,2 mm)

A Supply Voltage
2 24Vac/dc (-15%;+10%) 50/60 Hz -1.5VA
3 24Vac (±15%) 50/60 Hz -1.5VA
4 115Vac (±15%) 50/60 Hz -1.5VA
5 230Vac (±15%) 50/60 Hz -1.5VA
8 10..30 Vdc

BC Input
05 J, Fe CuNi IEC584.1(ITS90)
10 K, NiCr Ni IEC584.1(ITS90)
11 Pt 100, (-50...400°C)
09 Pt 100, (-19.9...99.9°C)
12 PTC (-50....150°C)
15 PTC (-19.9...99.9°C)
14 Pt 1000, (-50...400°C)
13 Pt 1000, (-19.9...99.9°C)
18 NTC (-50...100°C)
19 NTC (-19.9...99.9°C)

V
1 PTC-M6L40.K1.5 (PTC Air Probe with 1.5 m silicon cable)
2 PTCS-M6L30.K1.5.1/8" (PTC Liquid Probe with 1.5 m silicon cable)
3 NTC-M5L20.K1.5 (NTC Probe, thermoplastic moulded with 1.5 m cable for cooling application)
4 NTC-M6L50.K1.5 (Metal protective tubular, 1.5 m wired NTC probe)

Process Output E
1 Relay Output (10A @ 250Vac)
2 SSR Driver Output (Maximum 28mA @ 15Vdc)

Heating Controller

Single SET ON/OFF

ESM-3711-HN

With Buzzer

CE EAC

- Remote access, data collecting and controlling wiht Modbus RTU
- Installing parameters using Prokey
- User can select to start cooking time (Timer) when temperature reaches to the set value
- Adjustable temperature offset
- Functional Internal Buzzer
- ON / OFF temperature control

Specifications

4 Digits display
User can select to start Cooking Time when Temperature reaches to the Set Value
PTC, NTC, PT-100, PT-1000 thermoresistances input types
Fe-Const (J), NiCr-Ni (K) thermocouples input types
Temperature Control Output and Alarm Output
Relay or SSR Driver Output
Adjustable Cooking Time from Front Panel
Digital Input (Start/Stop Input for Cooking Time)
Temperature Control According to the Cooking Time
Adjustable Internal Buzzer According to Cooking Time,
Probe Defect and Alarm Status

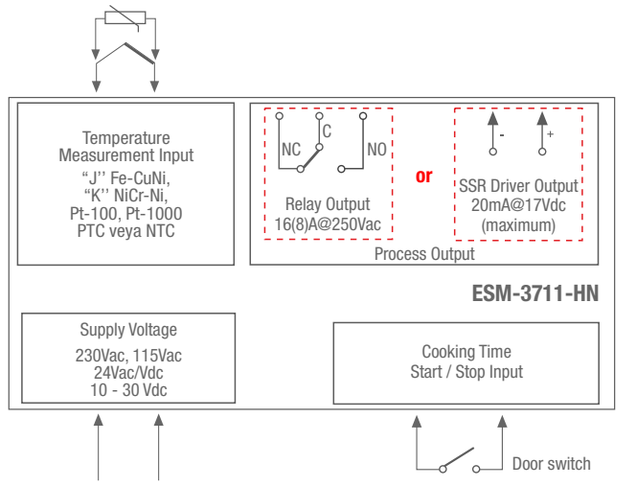

Technical Specification

Accuracy: ±1%of scale
Cold Junction Compensation: Automatically ± 0.1°C/1°C
Sensor Break Protection: Upscale
Sampling Cycle: 3 samples per second

INPUT X1 | OUT PUT X1 | 77x35

ESM-3711-HN . A . BC . 0 . E / 00 . 00 /. 1 . V . 0 . 0

ESM-3711-HN
(76x34,5X71 mm)

A Supply Voltage
- 2 24Vac/dc (±15%) 50/60 Hz
- 3 24Vac (±15%) 50/60 Hz
- 4 115Vac (±15%) 50/60 Hz
- 5 230Vac (±15%) 50/60 Hz
- 8 10...30Vdc

BC Input
- 05 J, Fe CuNi IEC584.1(ITS90)
- 10 K, NiCr Ni IEC584.1(ITS90)
- 11 Pt 100, (-50...400°C)
- 09 Pt 100, (-19.9...99.9°C)
- 12 PTC (-50....150°C)
- 14 Pt 1000, (-50...400°C)
- 13 Pt 1000, (-19.9...99.9°C)
- 18 NTC (-50...100°C)

V
- 1 PTC-M6L40.K1.5 (PTC Air Probe with 1.5 m silicon cable)
- 2 PTCS-M6L30.K1.5.1/8" (PTC Liquid Probe with 1.5 m silicon cable)
- 3 NTC-M5L20.K1.5 (NTC Probe, thermoplastic moulded with 1.5 m cable for cooling application)
- 4 NTC-M6L50.K1.5 (Metal protective tubular, 1.5 m wired NTC probe)

Process Output E
- Relay Output: (16(8)A @ 250Vac) 1
- SSR Driver Output: (Max.20mA, Max.17Vdc) 2

Cooling Controller Devices

Single & Duel SET

ESM-3711-CN ESM-3712-CN

With Buzzer

CE EAC

- 3 Output for compressor, defrost and fan controls
- Separately adjustable 2 offset value for cabinet and evaporator sensor
- Operation selection of compressor operate continously, stops or operates periodically in case of cabinet probe defect
- Fan can be operated depending on compressor and defrost

Specifications

Cooling Application
NTC Input or PTC Input (Must be determined in order.)
ON/OFF Control
Adjustable °C and°F
Set value boundaries
2 sensor input for cabinet and evaporator
Configurable digital input
Selectable defrost function (hot gas or electric)
Adjustable defrost time from front panel
Fan can be operated depending on evaporator temperature or (cabinet-evaporator) temperature
Defrost time and/or manuel defrost and/or temperature set value protection
Installing parameters using Prokey
Remote access, data collecting and controlling with ModBus RTU
Password protection for programming mode

Technical Specification

Accuracy: ±1%of scale
Sensor Break Protection: Upscale
Sampling Cycle: 3 samples per second

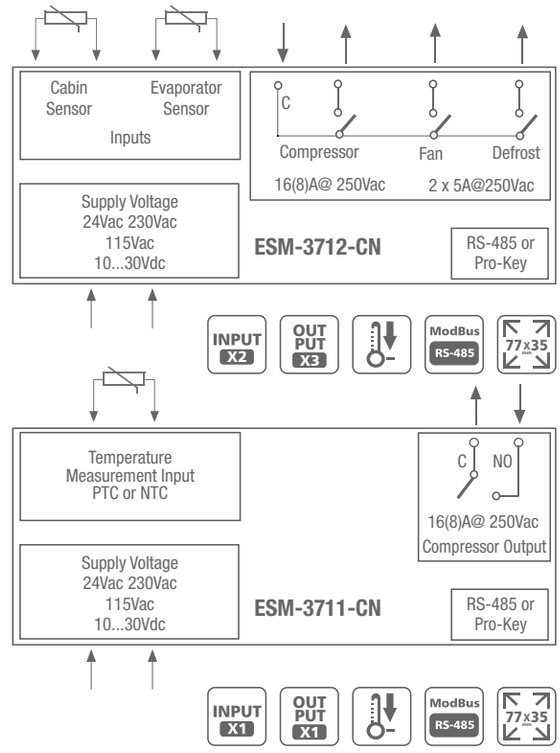

. A . BC . 0 . 1 / FG . HI / 1 . V . 0 . 0

ESM-3711-CN (76x34,5x71 mm)
ESM-3712-CN (76x34,5x71 mm)

A Supply Voltage
- 3 24Vac (±15%) 50/60 Hz -1.5VA
- 4 115Vac (±15%) 50/60 Hz -1.5VA
- 5 230Vac (±15%) 50/60 Hz -1.5VA
- 8 10...30Vdc

BC Input
- 12 PTC, -50°C...150°C
- 18 NTC, -50°C...100°C

E Process Output
- 1 Process Output: Relay (16(8)A @ 250Vac, 1 NO)

V
- 1 PTC-M6L40.K1.5 (PTC Air Probe with 1.5 m silicon cable)
- 2 PTCS-M6L30.K1.5.1/8" (PTC Liquid Probe with 1.5 m silicon cable)
- 3 NTC-M5L20.K1.5 (NTC Probe, thermoplastic moulded with 1.5 m cable for cooling application)
- 4 NTC-M6L50.K1.5 (Metal protective tubular, 1.5 m wired NTC probe)

Fan and Defrost Output FG / HI
- ESM-3711-CN (Fan and Defrost Out Not Available) 00
- (ESM-3712-CN) Relay Output Module (5A @250Vac) 01

Temperature Controller

Dual SET On/Off Heating and Cooling Controller

ESM-3712-HCN

With Buzzer

- Installing parameters using Prokey
- 2 Output for compressor and alarm controls
- Remote access, data collecting and controlling with Modbus RTU
- Process Set value and Alarm Set value low limit and set value high limit boundaries

Specifications

4 Digits Display
NTC Inputor PTC Input (Must be determined in order)
ON/OFF temperature control
Selectable heating or cooling function
Selection of operation with hysteresis
Adjustable temperature offset
Alarm parameters
Operation selection of compressor operates continously, stops or operates periodically in case of sensor defect
Compressor protection delays
Password protection for programming section
Adjustable Alarm Set Value from front panel
Adjustable internal buzzer according to Sensor prob defect and Alarm status

Technical Specification

Accuracy: ±1%of scale
Cold Junction Compensation: Automatically ± 0.1°C/1°C
Sensor Break Protection: Upscale
Sampling Cycle: 3 samples per second

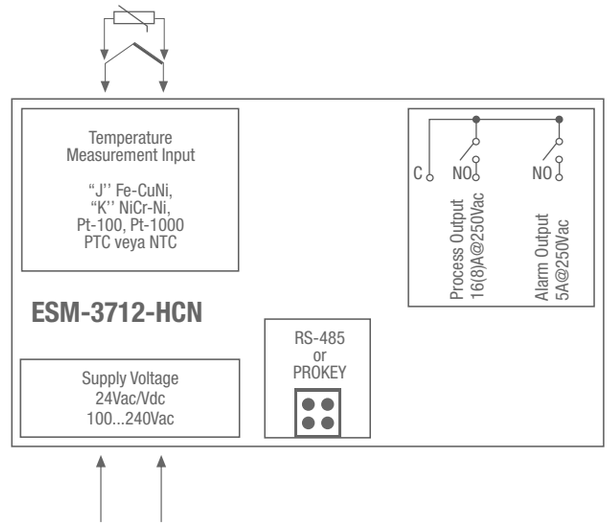

ModBus RS-485 | INPUT X1 | OUT PUT X2 | 77x35

ESM-3712-HCN . A . BC . 0 . 1 / 1 . 00 / . 1 . V . 0 . 0

ESM-3712-HCN
(76x34,5x71 mm)

A Supply Voltage
- 2 24Vac/dc (±15%) 50/60 Hz
- 3 24Vac (±15%) 50/60 Hz
- 4 115Vac (±15%) 50/60 Hz
- 5 230Vac (±15%) 50/60 Hz
- 8 10...30Vdc

BC Input
- 05 J, Fe CuNi IEC584.1(ITS90)
- 10 K, NiCr Ni IEC584.1(ITS90)
- 11 Pt 100, (-50...400°C)
- 9 Pt 100, (-19.9...99.9°C)
- 12 PTC (-50...150°C)
- 18 NTC (-50...100°C)
- 14 Pt 1000,(-50...400°C)
- 13 Pt 1000, (-19.9...99.9°C)

V
- 1 PTC-M6L40.K1.5 (PTC Air Probe with 1.5 m silicon cable)
- 2 PTCS-M6L30.K1.5.1/8" (PTC Liquid Probe with 1.5 m silicon cable)
- 3 NTC-M5L20.K1.5 (NTC Probe, thermoplastic moulded with 1.5 m cable for cooling application)
- 4 NTC-M6L50.K1.5 (Metal protective tubular, 1.5 m wired NTC probe)

Alarm Output FG
(5A @ 250Vac,1 NO) 1

Process Output E
Relay (16(8)A @ 250Vac, 1 NO) 1

Temperature Controllers

Single & Dual ON/OFF

ESM-4410 ESM-7710 ESM-9910

ON/OFF Control Form

Selectable Heating and Cooling Function

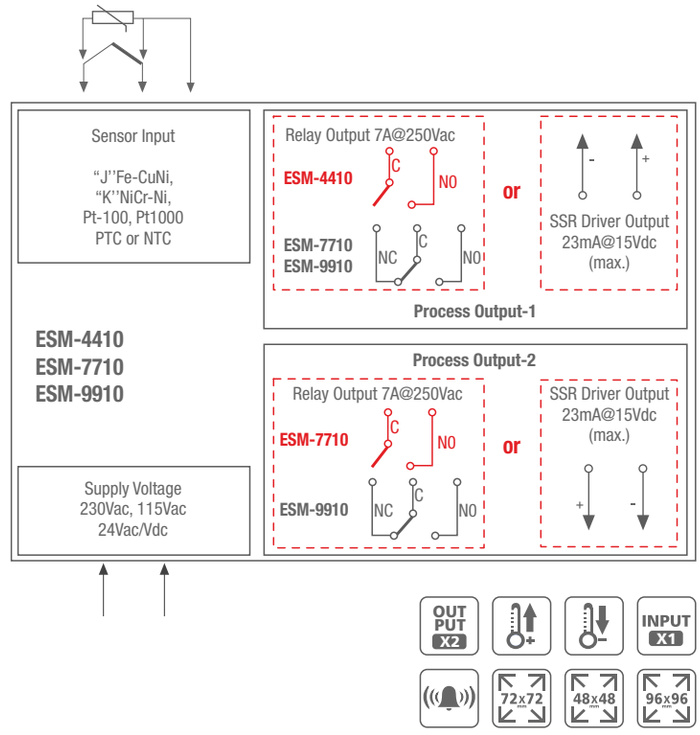

Specifications

PTC, NTC, PT-100, PT-1000 thermoresesistances input types

Fe-Const (J), NiCr-Ni (K) thermocouples input types (Must be determined in order)

Operating Type Selection with Hysteresis

Adjustment of Temperature Offset Value

Minimum Pulling Time Adjustment for Control Outputs

Password Protection for Programming Section

Technical Specification

Accuracy: ±1%of scale

Cold Junction Compensation: Automatically ± 0.1°C/1°C

Sensor Break Protection: Upscale

Sampling Cycle: 3 samples per second

. A . BC . 0 . E / FG . 00 / 2 . V . 0 . 0

ESM-4410 (48x48x95 mm)
ESM-7710 (72x72x95,5 mm)
ESM-9910 (96x96x96 mm)

A Supply Voltage
- 2 24Vac/dc 50/60 Hz (-15%; +10%)
- 3 24Vac 50/60 Hz (-15%; +10%)
- 4 115Vac 50/60 Hz (-15%;+10%)
- 5 230Vac 50/60 Hz (-15%;+10%)

BC Input
- 15 PTC (-19.9...99.9°C)
- 14 Pt 1000, (-50...400°C)
- 13 Pt 1000, (-19.9...99.9°C)
- 18 NTC (-50...100°C)
- 19 NTC (-19.9...99.9°C)
- 05 J, Fe CuNi IEC584.1(ITS90)
- 10 K, NiCr Ni IEC584.1(ITS90)
- 03 Pt 100, (0...400°C)
- 09 Pt 100, (-19.9...99.9°C)
- 12 PTC (-50....150°C)

V
- 1 PTC-M6L40.K1.5 (PTC Air Probe 1.5 m silicon cable)
- 2 PTCS-M6L30.K1.5.1/8" (PTC Liquid Probe with 1.5 m silicon cable)
- 3 NTC-M5L20.K1.5 (NTC Probe thermoplastic moulded with 1.5m cable for cooling application)
- 4 NTC-M6L50.K1.5 (Metal protective tubular, 1.5 m wired NTC probe)

Process Output (ESM-9910, ESM-7710 for devices) FG
- 0 None
- 1 Relay Output : (7A @ 250Vac)
- 2 SSR Output Module (Max.23mA @15Vdc)

Process Output E
- 1 Relay Output: (7A @ 250Vac)
- 2 SSR Output Module (Max.23mA @15Vdc)

Temperature Controllers

Dual SET PID

ESM-3720

With Buzzer

CE EAC

- Remote acces, data collecting and controlling with Modbus RTU
- Installing parameters using Prokey
- PID or ON/OFF selectable temperature control
- Password protection for programming section
- Having CE mark according to European Norms
- Adjustable internal buzzer according to sensor defect status

Specifications

4 Digits Display
NTC Input or PTC Input or
J type thermocouple Input or Ktype thermocouple Input or
2-Wire PT-100 Input ori 2-Wire PT-1000 Input (Must be determined in order.)
Adjustable temperature offset
Selection of operation with hysteresis
Adjustable temperature offset
Set value low limit and set value high limit boundaries
Operation selection of compressor operates continously,
stops or operates periodically in case of sensor defect
Compressor protection delays

Technical Specification

Accuracy: ±1%of scale
Cold Junction Compensation: Automatically ± 0.1°C/1°C
Sensor Break Protection: Upscale
Sampling Cycle: 3 samples per second

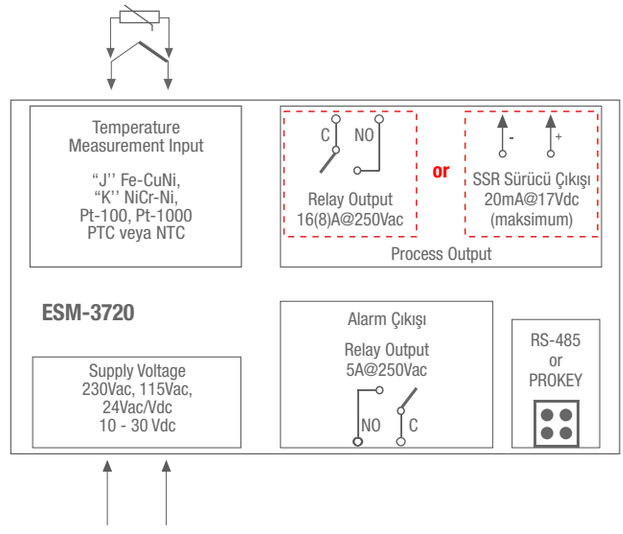

INPUT X1 | OUT PUT X2 | 77x35 | ModBus RS-485

ESM-3720 A . BC . 0 . E / 01 . 00 /. 1 . V . 0 . 0

ESM-3720 (76x34,5x71mm)

A Supply Voltage
- 2 24Vac/dc (±15%) 50/60 Hz
- 3 24Vac (±15%) 50/60 Hz
- 4 115Vac (±15%) 50/60 Hz
- 5 230Vac (±15%) 50/60 Hz
- 8 10-30Vdc

BC Input
- 05 J, Fe CuNi IEC584.1(ITS90)
- 10 K, NiCr Ni IEC584.1(ITS90)
- 11 Pt 100, (-50...400°C)
- 09 Pt 100, (-19.9...99.9°C)
- 12 PTC (-50....150°C)
- 14 Pt 1000, (-50...400°C)
- 13 Pt 1000, (-19.9...99.9°C)
- 18 NTC (-50...100°C)

V
- 1 PTC-M6L40.K1.5 (PTC Air Probe with 1.5 m silicon cable)
- 2 PTCS-M6L30.K1.5.1/8" (PTC Liquid Probe with 1.5 m silicon cable)
- 3 NTC-M5L20.K1.5 (NTC Probe, thermoplastic moulded with 1.5 m cable for cooling application)
- 4 NTC-M6L50.K1.5 (Metal protective tubular, 1.5 m wired NTC probe)

Alarm Output FG
- 01 5A@250 Vac, 1 NO

Process Output E
- 1 Relay Output: (16(8)A @ 250Vac)
- 2 SSR Driver output (Maximum 20mA @ 17Vdc)

PID Temperature Controllers

ESM-4420 ESM-4920
ESM-7720 ESM-9420 ESM-9920

CE EAC

- Universal process input (TC,RTD)
- Self-Tune (Step Response Tuning)
  automatic adaptation of the coefficients to the system
- 2 Relays and 1 SSR drive output
- Soft Start Output For Resistance Durability

Specifications

4 Digits process (PV) and 4 Digits set value (SV) display
Configurable ON/OFF, P, PI, PD, and PID control forms
Programmable Heating or Cooling Functions for Control Output
Alarm Functions for Alarm Output
SET Value Limitation For System Protection
Sensor Break Protection

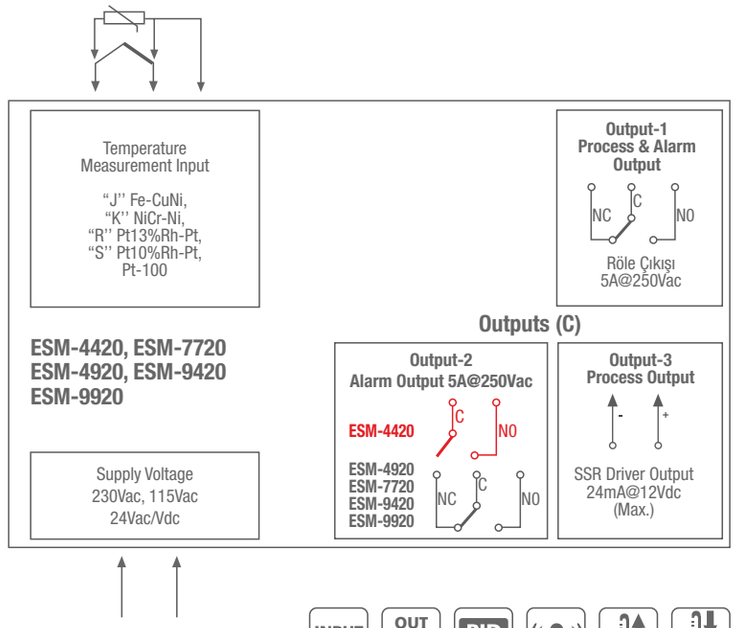

Technical Specification

Accuracy: ±0.25%of full scale for thermocouple, thermoresistance
Cold Junction Compensation: Automatically ± 0.1°C/1°C
Line Compensation: Maximum 10 Ohm
Sensor Break Protection: Upscale
Sampling Cycle: 3 samples per second
Input Filter: 1.0 second

. A . 20 . 0 . E / 01 . 02 / 0 . 0 . 0 . 0

ESM-4420 (48x48x95 mm)
ESM-7720 (72x72x95,5 mm)
ESM-4920 (96x48x94,5 mm)
ESM-9420 (48x96x94,5 mm)
ESM-9920 (96x96x96 mm)

A Supply Voltage
2 24Vac/Vdc (-15%; +10%)50/60 Hz
3 24Vac (-15%; +10%)50/60 Hz
4 115Vac (-15%; +10%)50/60 Hz
5 230Vac (-15%; +10%)50/60 Hz

BC Input
20 Universal Input: TC, RTD
Thermocouple (TC): L(DIN 43710), J, K, B, E and N(IEC584.1) (ITS90), C(ITS90)
Thermoresistance (RTD): PT-100, (IEC 751) (ITS90)

Output-3 HI
SSR Driver Output (max.24mA @ 12Vdc) 02

Output-2 FG
Alarm Output :Relay (5A @250Vac) 01

Output-1 E
Standard Relay Output: (5A @ 250Vac) 1

PID Temperature Controllers

ESD-9950-N

- Adjustable temperature offset
- Programmable control and alarm functions for control outputs
- Programmable ON-OFF, P, PI, PD, PID control forms
- With Auto Tune / Self Tune operation, the PID coefficients adaptation to the system

Specifications

4 Digits display
J type Thermocouple Input or
K type Thermocouple Input or
R type Thermocouple Input or
S type Thermocouple Input or
2 or 3 wire PT 100 Input

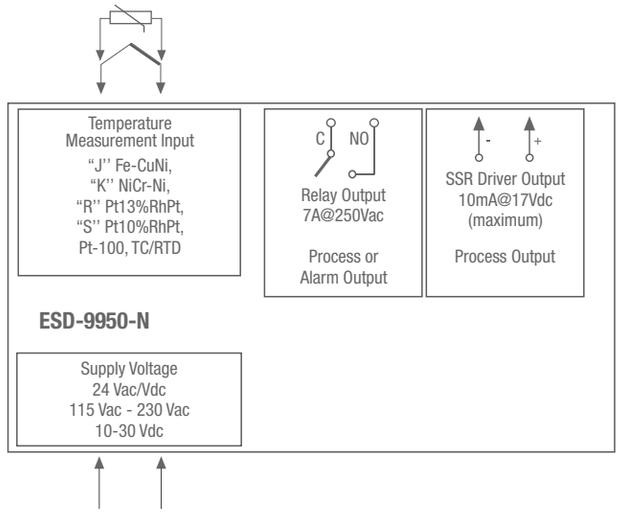

Technical Specification

Accuracy: ±25%of scale
Cold Junction Compensation: Automatically ± 0.1°C/1°C
Sensor Break Protection: Upscale
Sampling Cycle: 10 samples per second

ESD-9950-N . A . 20 . 0 . 1 / 02 . 00 / . 0 . 0 . 0 . 0

ESD-9950-N (96x96x100 mm)

A Supply Voltage
2 24Vac/dc (±15%) 50/60 Hz
3 24Vac (±15%) 50/60 Hz
4 115Vac (±15%) 50/60 Hz
5 230Vac (±15%) 50/60 Hz
8 10 - 30 Vdc

BC Input
20 Universal Input: TC, RTD
Thermocouple (TC): J, K, R, S and N(IEC584.1) (ITS90), C(ITS90)
Thermoresistance (RTD): PT-100, (IEC 751) (ITS90)

Process Output FG
SSR Driver Output (Max. 10mA,Max.17Vdc) 02

Process or Alarm Output E
Relay Output (7A @ 250Vac) (NO,NC,C) 1

Order Code

A	BC	D	E	/	FG	HI	/	U	V	W	Z
		0		/			/	1		0	0

		ESM-3710-N	ESM-1510-N	ESM-3711-HN	ESM-3711-CN	ESM-3712-CN	ESM-3712-HCN	ESM-4410	ESM-7710	ESM-9910	ESM-3720	ESM-4420	ESM-9420	ESM-7720	ESM-9420	ESM-9920	ESD-9950-N
A	Supply Voltage																
2	24Vac/Vdc (-15%, +10%) 50/60Hz	+	+	+	+	+	+	+	+	+	+	+	+	+	+	+	+
3	24Vac (-15%, -15%) 50/60Hz	+	+	+	+	+	+	+	+	+	+	+	+	+	+	+	+
4	115Vac (-15%, -15%) 50/60Hz	+	+	+	+	+	+	+	+	+	+	+	+	+	+	+	+
5	230Vac (-15%, -15%) 50/60Hz	+	+	+	+	+	+	+	+	+	+	+	+	+	+	+	+
8	10 - 30 Vdc	+	+	+	+	+	+	-	-	-	+	-	-	-	-	-	+
BC	Input Type																
20	Universal (TC or RTD)	-	-	-	-	-	-	-	-	-	+	+	+	+	+	+	+
05	J, Fe-CuNi, 0...800 ºC	+	+	+	-	-	+	+	+	+	-	-	-	-	-	-	-
10	K, NiCr-Ni, 0...999 ºC	+	+	+	-	-	+	+	+	+	-	-	-	-	-	-	-
03	Pt-100, 0...400 ºC	-	-	-	-	-	-	+	+	+	-	-	-	-	-	-	-
11	Pt-100 -50...400 ºC	+	+	+	-	-	+	-	-	-	-	-	-	-	-	-	-
09	Pt-100, -19.9...99.9 ºC	+	+	+	-	-	+	+	+	+	-	-	-	-	-	-	-
12	PTC, -50...150 ºC	+	+	+	+	+	+	+	+	+	-	-	-	-	-	-	-
15	PTC, -19.9...99.9 ºC	-	+	-	-	-	-	+	+	+	-	-	-	-	-	-	-
14	Pt-1000, -50...400 ºC	+	+	+	-	-	+	+	+	+	-	-	-	-	-	-	-
13	Pt-1000, -19.9...99.9 ºC	+	+	+	-	-	+	+	+	+	-	-	-	-	-	-	-
18	NTC, -50...100 ºC	+	+	+	+	+	+	+	+	+	-	-	-	-	-	-	-
19	NTC, -19.9...99.9 ºC	-	+	-	-	-	-	+	+	+	-	-	-	-	-	-	-
E	Output 1																
1	Relay Output	+	+	+	+	+	+	+	+	+	+	+	+	+	+	+	+
2	SSR Driver Output (max. 20mA@12Vdc)	+	+	+	-	-	-	+	+	+	+	-	-	-	-	-	-
3	Relay Output (30(15)A@240Vac)	+	-	-	-	-	-	-	-	-	-	-	-	-	-	-	-
FG	Output 2																
01	Relay Output	-	-	-	-	+	+	-	+	+	+	+	+	+	+	+	-
02	SSR Driver Output (max. 20mA@12Vdc)	-	-	-	-	-	-	-	+	+	-	-	-	-	-	-	+
HI	Output 3																
02	SSR Driver Output (max. 20mA@12Vdc)	-	-	-	-	-	-	-	-	-	-	+	+	+	+	+	-
V	PTC and NTC Temperature Sensor Selections																
0	Without Sensor	+	+	+	+	+	+	+	+	+	+	+	+	+	+	+	+
1	PTC-M6L40.K1,5 PTC Air probe, 1,5 m silicon cable	+	+	+	+	+	+	+	+	+	+	-	-	-	-	-	-
2	PTCS-M6L30.K1,5.1/8'' PTC Liquid probe with, 1,5 m silicon cable, 1/8'' fittingnut	+	+	+	+	+	+	+	+	+	+	-	-	-	-	-	-
3	NTC-M5L20.K1,5 Thermoplastic covering for cooling application 1,5 m cable NTC probe	+	+	+	+	+	+	+	+	+	+	-	-	-	-	-	-
Specifications																	
Dimension (mm)		77x35	DIN Rail	77x35	77x35	77x35	77x35	48x48	72x72	96x96	77x35	48x48	96x48	72x72	48x96	96x96	96x96
Password protection for programming mode		+	+	+	+	+	+	+	+	+	+	+	+	+	+	+	+
Set value boundaries		+	+	+	+	+	+	+	+	+	+	+	+	+	+	+	+
Adjustable temperature offset		+	+	+	+	+	+	+	+	+	+	+	+	+	+	+	+
ON/OFF Temperature control		+	+	+	+	+	+	+	+	+	+	+	+	+	+	+	+
Adjustable P, PD, PI ve PID Control forms		-	-	-	-	-	-	-	-	-	+	+	+	+	+	+	+
Adjustable Compressor delay times		+	+	-	-	+	+	-	-	-	-	-	-	-	-	-	-
Alarm functions for alarm output		-	-	-	-	-	+	-	-	-	-	+	+	+	+	+	-
Adaptation of PID coefficients to the system with Self-Tune operation		-	-	-	-	-	-	-	-	-	+	+	+	+	+	+	+
Universal Thermocouple and thermoresistances process input		-	-	-	-	-	-	-	-	-	+	+	+	+	+	+	+
Programmable Heating or Cooling functions for control outputs		+	+	-	-	-	+	+	+	+	+	+	+	+	+	+	+
Adjustable hysteresis value		+	+	+	+	+	+	+	+	+	+	+	+	+	+	+	+
Adjustable re-activation time for control outputs		+	+	-	-	-	+	+	+	+	-	-	-	-	-	-	-
Functional Internal Buzzer		+	+	+	+	+	+	-	-	-	+	-	-	-	-	-	-
Installing Parameters vie Prokey		+	+	+	+	+	+	-	-	-	+	-	-	-	-	-	-
Data collecting & controlling with Modbus RTU		+	+	+	+	+	+	-	-	-	+	-	-	-	-	-	-

Order Code		Eco LITE	Eco PID	Eco HR
A	Dimension			
4	48x48mm	+	+	+
B	Supply Voltage			
5	230Vac (-15%, +10%) 50/60Hz	+	+	+
6	10-30Vdc	+	+	+
3	115Vac (-15%, +10%) 50/60Hz	+	+	+
C	Output-1			
1R	1xRelay Output (NO+C) 5A@250Vac	+	+	+
2R	2xRelay Output (NO+C) 5A@250Vac	+	+	+
D	Output-2			
S	SSR driver output (Maks. 10mA, 12Vdc)	–	+	+
E	Communication			
0	Without Communication	+	+	+
485	RS-485 ModBus	–	+	+
DI	Digital Input (220Vac) for secondary set value	–	–	+
Specifications				
Universal Thermocouples (TC) & Thermoresistances (RTD) input		+	+	+
ON-OFF control form		+	+	+
P, PI, PID, control form		–	+	+
Adaptation of PID coefficients to the system with Self-Tune and Auto-Tune operation		–	+	+
Selectable heating and cooling function		+	+	+
Adjustable temperature offset value		+	+	+
Adjustable hysteresis value		+	+	+
Minimum pulling time adjustment for control outputs		+	+	+
Saving and Recovery of user parameters		+	+	+
Return to Factory settings		+	+	+
RS-485ModBus (RTU) communication option		–	+	+
Digital or RS-485 input for activate the 2nd Set value		–	–	+

Temperature Controllers

ECO LITE

- TC (J,K,R,S,T Input Types) and RTD inputs selectable by parameter
- Low Power Consumption, Energy saving and Environmentally Friendly with 2VA
- Saving and Recovery of user parameters
- Return to Factory Settings

Specifications

3 Digits Process (PV) and 4 Digits Set (SV) display
Process input (TC, RTD)
ON-OFF control form
Selectable heating and cooling function
Selectable temperature offset value
Operation type selection with hysteresis
Minimum pulling time adjustment
for control outputs
Password protection for programming mode

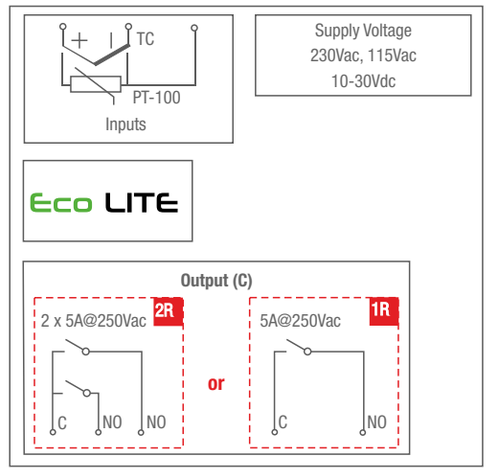

Technical Specification

Accuracy: ±0.25%of full scale
Cold Junction Compensation: Automatically ± 0.1°C/1°C
Line Compensation: Maximum 10 Ohm
Sensor Break Protection: Upscale
Sampling Cycle: 0.1 second

INPUT X1 | OUT PUT X2 | 48x48

ECO-LITE . 4 . B . C . 0 . 0

ECO-LITE

A Dimensions
4 48x48x80,52 mm

B Power Supply
5 230Vac (-15%, +10%) 50/60Hz
6 10-30Vdc (-15%, +10%)
3 115Vac (-15%, +10%) 50/60Hz

C Output-1
1R 1xRelay Output (NO+C) 5A@250Vac
2R 2xRelay Output (NO+C) 5A@250Vac

PID Temperature Controllers

ECO PID

- High Resolution Sensitive PID control
- TC (J,K,R,S,T Input Types) and RTD inputs selectable by parameter
- Low Power Consumption, Energy saving and Environmentally Friendly with 2VA
- Saving and Recovery of user parameters
- RS-485 Modbus (RTU) communication option
- Return to Factory Settings

Specifications

3 Digits Process (PV) and 4 Digits Set (SV) display
Process input (TC, RTD)
Programmable ON-OFF, P, PI, PD, PID control forms
Adaptation of PID Coefficients to the system
with Self-Tune operation (Step ResponseTuning) and
Auto-Tune (limitcycling-tuning)
Selectable heating and cooling function
Selectable temperature offset value
Operation type selection with hysteresis
Minimum pulling time adjustment for control outputs
Password protection for programming mode

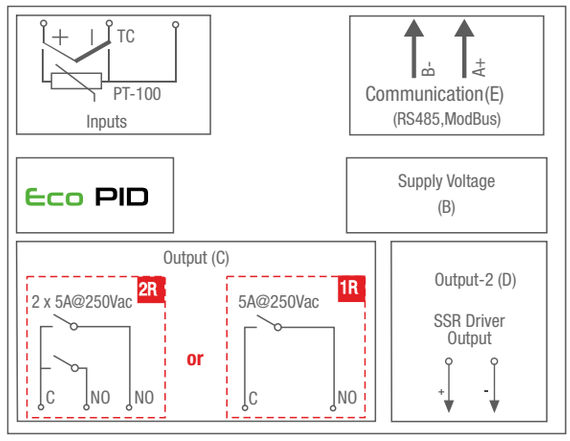

Technical Specification

Accuracy: ±0.25%of full scale
Cold Junction Compensation: Automatically ± 0.1°C/1°C
Line Compensation: Maximum 10 Ohm
Sensor Break Protection: Upscale
Sampling Cycle: 0.1 second

ECO-PID . 4 . B . C . S . E

ECO-PID

A Dimensions
4 48X48X80,52 mm

B Supply Voltage
5 230Vac (-15%, +10%) 50/60Hz
6 10-30Vdc (-15%, +10%)
3 115Vac (-15%, +10%) 50/60Hz

C Output-1
1R 1xRelay Output (NO+C) 5A@250Vac
2R 2xRelay Output (NO+C) 5A@250Vac

Output-2 D
SSR Driver Output (Max. 10mA, Max. 12Vdc) S

Communication Options E
Communication N/A (Not Available) 0
RS-485 Communication 485

PID Hot Runner

ECO HR

CE

- High Resolution Sensitive PID control
- TC (J,K,R,S,T Input Types, PT-100) selectable by parameter
- Low Power Consumption, Energy saving and Environmentally Friendly with 2VA
- Activate 2nd Set Value by front panel
- Saving and Recovery of user parameters
- RS-485 Modbus (RTU) communication option
- Return to Factory Settings
- Digital or RS-485 input for activate the 2nd Set Value (Optional)

Specifications

3 Digits Process (PV) and 4 Digits Set (SV) display
Process input (TC,RTD)
Programmable ON-OFF, P, PI, PD, PID control forms
Adaptation of PID Coefficients to the system
with Self-Tune operation (Step Response Tuning) and
Auto-Tune (limitcycling-tuning)
Selectable heating and cooling function
Selectable temperature offset value
Operation type selection with hysteresis
Minimum pulling time adjustment for control outputs
Password protection for programming mode

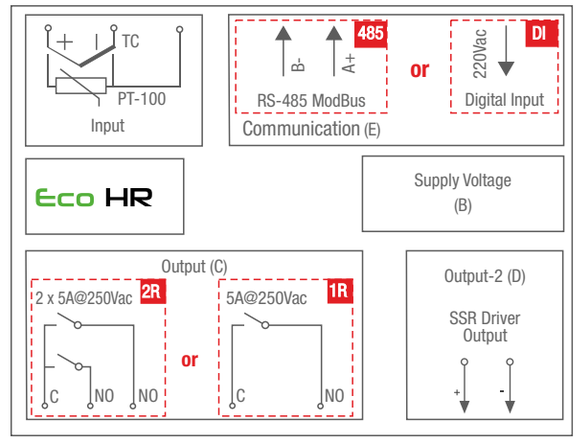

Technical Specification

Accuracy: ±0.25%of full scale
Cold Junction Compensation: Automatically ± 0.1°C/1°C
Line Compensation: Maximum 10 Ohm
Sensor Break Protection: Upscale
Sampling Cycle: 0.1 second

ECO-HR . 4 . B . C . S . E

ECO-HR

A Dimensions
4 48X48X80,52 mm

B Supply Voltage
5 230Vac (-15%, +10%) 50/60Hz
6 10-30Vdc (-15%, +10%)
3 115Vac (-15%, +10%) 50/60Hz

C Output-1
1R 1xRelay Output (NO+C) 5A@250Vac
2R 2xRelay Output (NO+C) 5A@250Vac

Output-2 D
SSR Driver Output (Max. 10mA, Max. 12Vdc) S

Communication Options E
Communication N/A (Not Available) 0
RS-485 Communication 485
Digital Input (220Vac) DI

Counters & Timers

EZM-XX50

- Configurable Counter, Totalizer Counter, Batch Counter, Timer, Chronometer, Frequencymeter and Tachometer
- Operation with Automatic and Manuel Reset
- Programmable Time Bases for Timer and Chronometer
- Multiplication Coefficient and Decimal Point Position

Specifications

6 Digits display
Reset, Pause and ChA-ChB Counting Inputs
Absolute or Offset Operation in Counter Function
Different Alarm Alternatives in Frequencymeter and
Cycle Measuring Functions
INC, DEC, INC/INC, INC/DEC, UP/DOWN,
x1 / x2 / x4 Counting with Phase Shifting Property in Counter
RS-232 (standard) or RS-485 (optional) Serial Communication
with Modbus ASCII or RTU Protocol

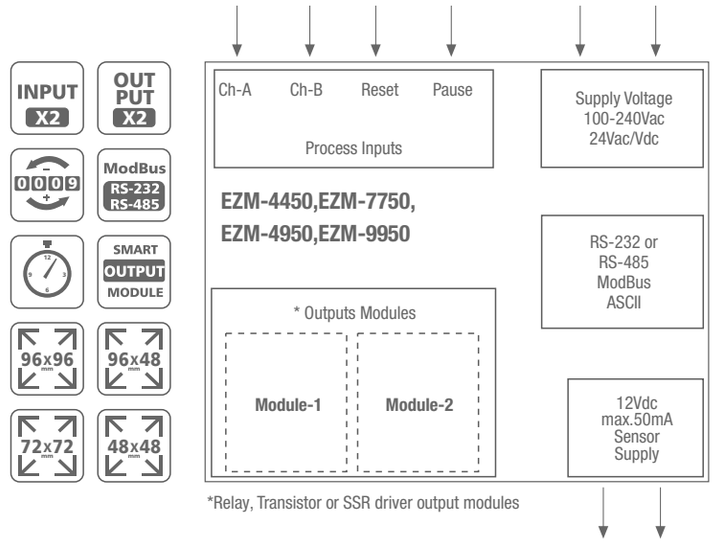

Technical Specification

Operating Temperature : 0...50°C
Humidity : 0-90/RH (non condensing)
Protection Class : Ip65 at front, IP20 at rear

. A . 00 . D . 0 / FG . HI / U . V . 0 . 0

EZM-4450 (48x48x116 mm)
EZM-7750 (72x72x87,5 mm)
EZM-4950 (96x48x86,5 mm)
EZM-9950 (96x96x87,5 mm)

A Supply Voltage
1 100-240Vac (-15%;+10%) 50/60 Hz
2 24Vac/24Vdc (-15%;+10%) 50/60 Hz

BC Input
00 Counting Inputs: Ch-A, Ch-B (Switch, proximity, capacitive sensor or encoder can be connected.) Sensor Type Selection: NPN or PNP selectable Count Input Types: INC, DEC, INC/DEC, INC/INC, UP/DOWN Max. 20KHZ.x1 / x2 /x4 phase shifting (for incremental encoder) counting; Maximum 10 KHZ

Input type V
NPN 0
PNP 1

Function U
Counter / Totalizer Counter 0
Batch Counter 1
Timer 2
Frequencymeter / Tachometer 3
Chronometer 4

Input/Output Modules FG / HI
None 00
Relay Output Module 01
SSR Output Module (Max.26mA @ 22Vdc) 02
Digital (Transistor) Output Module (Max.40mA @ 18Vdc) 03

Serial Communication D
None 0
RS-232 ModBus RTU 1
RS-485 ModBus RTU 2

Counters

Single SET Programmable Counters

EZM-XX30

CE EAC

- Reset, Pause and ChA-ChB Counting Inputs
- Multiplication Coefficient and Decimal Point Position

Specifications

6 Digits process (PV) and 6 digits Set (SV) Value Display
Operation with 1 Set Value
NPN/PNP Type Operation
Operation with Automatic and Manuel Reset
INC, DEC, INC/INC, INC/DEC, UP/DOWN,
x1 / x2 / x4 Counting with Phase Shifting Property

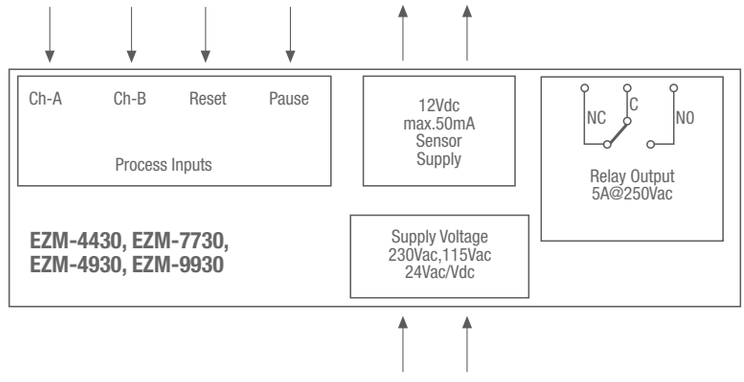

Technical Specification

Operating Temperature: 0...50 °C
Humadity: 0-90%RH (none condensing)
Protection: Ip65 at front, Ip20 at rear.

. A . 00 . 0 . 1 / 00 . 00 / 0 . 0 . 0 . 0

EZM-4430 (48x48x95 mm)
EZM-4930 (96x48x96 mm)
EZM-7730 (72x72x95,5 mm)
EZM-9930 (96x96x96 mm)

Process Output E
Relay Output: (5A @ 250Vac) 1

A Supply Voltage
2 24Vac/dc (-15%;+15%) 50/60 Hz
3 24Vac (-15%;+10%) 50/60 Hz
4 115Vac (-15%;+10%) 50/60 Hz
5 230Vac (-15%;+10%) 50/60 Hz

Input BC
Counting Inputs: Ch-A, Ch-B (Switch, proximity, capative sensor or encoder can be connected.)
Sensor Type Selection: NPN or PNP selectable.
Count Input Types: INC, DEC, INC/DEC, INC/INC, UP/DOWN Max. 20KHZ.
x1 / x2 /x4 phase shifting(for incremental encoder); Maximum 10 KHZ 00

Timer Relay

EZM-3735

- Start and Stop Possibility by front Panel
- External Start and Pause Input
- Programmable Time Bases (Second, Minute, Hour)
- Adjustable internal buzzer according to Timer Stop status.

Specifications

4 Digits Display
Operation with One Set value
Single Contact Output for Timing control (ON /OFF)
Pause possibility by front Panel
Set value high limit boundaries
Display can be adjusted to show Second, Minute and Hour
Password protection for programming section
Having CE mark according to European Norms

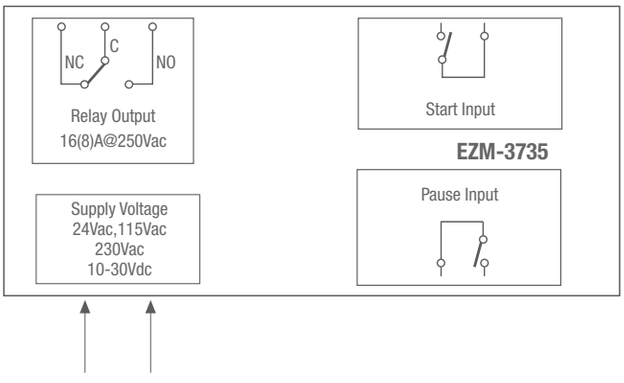

Technical Specification

Operating Temperature : 0...50°C
Humidity : 0-90/RH (non condensing)
Protection Class : Ip65 at front, IP20 at rear

INPUT X1 | OUT PUT X1 | 77x35

EZM-3735 . A . 00 . 0 . 1 / 07 . 07 / 1 . 0 . 0 . 0

EZM-3735 (76x34,5x71 mm)

Process Output E
Relay Output: (16(8)A @ 250Vac) 1

A Supply Voltage
3 24Vac (±15%) 50/60 Hz -1.5VA
4 115Vac (±15%) 50/60 Hz -1.5VA
5 230Vac (±15%) 50/60 Hz -1.5VA
8 10...30Vdc

Timer Relays

EZM-XX35

CE EAC

- Operation with Automatic and Manuel Reset
- Programmable Time Bases (Second, Minute, Hour)

Specifications

6 Digits process (PV) and 6 Digits Set (SV) Value Display
Single Contact Output for Timing control (ON /OFF)
Operation with 1 Set Value
Reset, Pause and Start Inputs
Password protection for programming section
NPN/PNP Type Operation

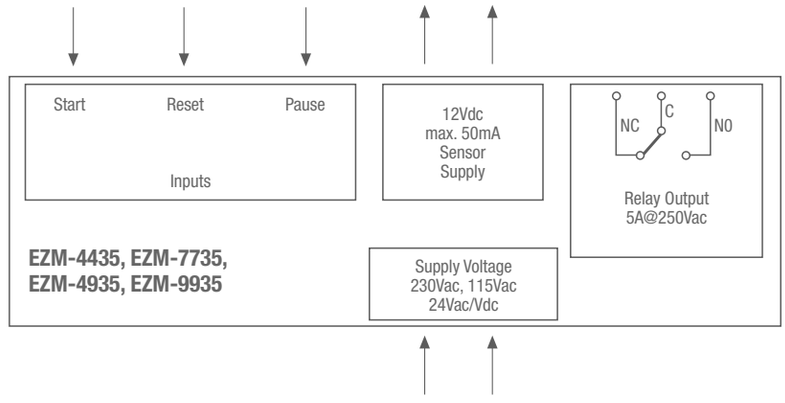

Technical Specification

Operating Temperature : 0...50°C
Humidity : 0-90/RH (non condensing)
Protection Class : Ip65 at front, IP20 at rear

INPUT X1 | OUT PUT X1 | 96x96 | 96x48 | 72x72 | 48x48

. A . 00 . 0 . 1 / 00 . 00 / 0 . 0 . 0 . 0

EZM-4435 (48x48x95 mm)
EZM-4935 (96x48x96 mm)
EZM-7735 (72x72x95,5 mm)
EZM-9935 (96x96x96 mm)

Process Output E
Relay Output: (5A @ 250Vac) 1

A Supply Voltage
2 24Vac/dc (-15%;+15%) 50/60 Hz
3 24Vac (-15%;+10%) 50/60 Hz
4 115Vac (-15%;+10%) 50/60 Hz
5 230Vac (-15%;+10%) 50/60 Hz

Input BC
Pause Input: Switch, proximity or capasitive sensor can be connected.
Start Input: Switch, proximity or capasitive sensor can be connected. 00
Sensor Type Selection: It can be selected NPN/PNP

Digital Tachometer

ERM 3770-N

- 0.07Hz to 10000Hz input signal
- Set Decimal Point
- Working with Process Set and Alarm Set value
- Automatic sampling (1 sec to 16 sec)

Specifications

4 Digits Display
Adjustable decimal point
Division rate
NPN or PNP input type
Alarm output
Relay or SSR driver output (It must be determined in order.)
Alarm Set value boundary
Programming mode password protection

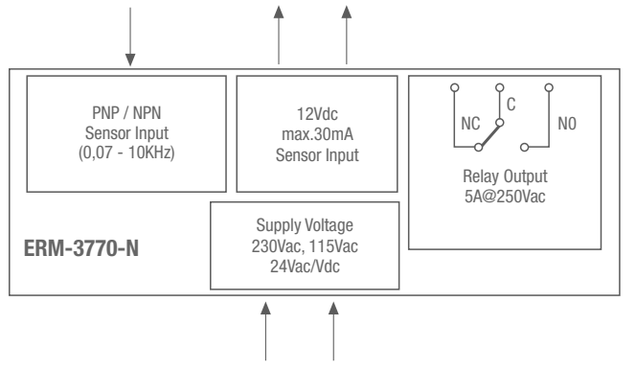

Technical Specification

Accuracy: 0.01% of scale

Counting Inputs: Ch-A, Ch-B (Switch, proximity, capacitive sensor or encoder can be connected.)

Sensor Supply Voltage: NPN or PNP selectable as

Sensor Input Type: INC, DEC, INC/DEC, INC/INC, UP/DOWN Max. 20KHZ.

x1 / x2 /x4 Counting for phase shift (for incremental encoder); Maximum 10 KHZ

INPUT X1 | OUT PUT X1 | 77x35

ERM-3770-N A . 0 . 0 . E / 00 . 00 /. 0 . 0 . 0 . 0

ERM-3770-N (77x35x62,5mm)

Process Output E
None 0
Relay Output: (5A @ 250Vac),1NO+1NC 1
SSR Driver Output: (28mA, 15Vdc Max.) 2

A Supply Voltage
2 24Vac/dc (-15%;+10%) 50/60 Hz
3 24Vac (±15%) 50/60 Hz
4 115Vac (±15%) 50/60 Hz
5 230Vac (±15%) 50/60 Hz

Order Code

A	BC	D	E	/	FG	HI	/	U	V	W	Z
	00			/			/	0	0	0	0

		EZM-4450	EZM-7750	EZM-4950	EZM-9950	EZM-4430	EZM-7730	EZM-4930	EZM-9930	EZM-4931	EZM-4435	EZM-7735	EZM-4935	EZM-9935	ERM-3770N	EZM-3735
A	Supply Voltage															
1	100...240Vac (-15%,+10%)50/60Hz	+	+	+	+	-	-	-	-	-	-	-	-	-	-	-
2	24Vac/Vdc (-15%, +10%) 50/60Hz	+	+	+	+	+	+	+	+	+	+	+	+	+	+	-
3	24Vac (-15%, -10%) 50/60Hz	-	-	-	-	+	+	+	+	+	+	+	+	+	+	+
4	115Vac (-15%, -10%) 50/60Hz	-	-	-	-	+	+	+	+	+	+	+	+	+	+	+
5	230Vac (-15%, -10%) 50/60Hz	-	-	-	-	+	+	+	+	+	+	+	+	+	+	+
8	10 - 30 Vdc	-	-	-	-	-	-	-	-	-	-	-	-	-	-	+
D	Serial Communication															
0	None					+	+	+	+	+	+	+	+	+	+	+
1	RS-232 ModBus ASCII	+	+	+	+	-	-	-	-	+	-	-	-	-	-	-
2	RS-485 ModBus ASCII	+	+	+	+	-	-	-	-	-	-	-	-	-	-	-
E	Process Output-1															
0	None	+	+	+	+					+					+	
1	Relay Output	-	-	-	-	+	+	+	+	-	+	+	+	+	+	+
FG	Modules Output-1															
00	None	+	+	+	+	+	+	+	+	+	+	+	+	+	+	+
01	Relay Output	+	+	+	+	-	-	-	-	+	-	-	-	-	-	-
02	SSR Driver Output (max. 20mA@12Vdc)	+	+	+	+	-	-	-	-	+	-	-	-	-	-	-
03	Digital (Transistor) Output (max. 40mA@18Vdc)	+	+	+	+	-	-	-	-	-	-	-	-	-	-	-
HI	Modules Output-2															
00	None	+	+	+	+	+	+	+	+	+	+	+	+	+	+	+
01	Relay Output	+	+	+	+	-	-	-	-	+	-	-	-	-	-	-
02	SSR Driver (max. 20mA@12Vdc)	+	+	+	+	-	-	-	-	+	-	-	-	-	-	-
03	Digital (Transistor) Output (max. 40mA@18Vdc)	+	+	+	+	-	-	-	-	-	-	-	-	-	-	-
Specifications																
Counter		+	+	+	+	+	+	+	+	+	-	-	-	-	-	-
Total Counter		+	+	+	+	-	-	-	-	-	-	-	-	-	-	-
Batch Counter		+	+	+	+	-	-	-	-	-	-	-	-	-	-	-
Timer		+	+	+	+	-	-	-	-	-	+	+	+	+	-	+
Chronometer		+	+	+	+	-	-	-	-	-	-	-	-	-	-	-
Frequencymeter		+	+	+	+	-	-	-	-	-	-	-	-	-	-	-
Tachometer		+	+	+	+	-	-	-	-	-	-	-	-	-	+	-
Working with automatic and manual reset		+	+	+	+	+	+	+	+	+	+	+	+	+	-	-
Smart Output module system		+	+	+	+	-	-	-	-	-	-	-	-	-	-	-
Ch-A, Ch-B Encoder inputs		+	+	+	+	+	+	+	+	+	-	-	-	-	-	-
Multiplication coefficient and decimal point position		+	+	+	+	+	+	+	+	+	-	-	-	-	+	+
Process display		6 digits	6 digits	6 digits	6 digits	6 digits	6 digits	6 digits	6 digits	6 digits	6 digits	6 digits	6 digits	6 digits	4 digits	4 digits
SET display		6 digits	6 digits	6 digits	6 digits	6 digits	6 digits	6 digits	6 digits	6 digits	6 digits	6 digits	6 digits	6 digits	-	-
Start input		-	-	-	-	-	-	-	-	-	+	+	+	+	-	+
Reset and Pause input		+	+	+	+	+	+	+	+	+	+	+	+	+	-	-
Supply voltage for switch and proximity sensors		+	+	+	+	+	+	+	+	+	+	+	+	+	+	-
Operation with 2 Set values		+	+	+	+	-	-	-	-	+	-	-	-	-	-	-
Password protection for programming section		+	+	+	+	+	+	+	+	+	+	+	+	+	+	+
Dimension																
77x35mm DIN		-	-	-	-	-	-	-	-	-	-	-	-	-	+	+
48x48mm DIN 1/16		+	-	-	-	+	-	-	-	-	+	-	-	-	-	-
72x72mm DIN		-	+	-	-	-	+	-	-	-	-	+	-	-	-	-
96x48mm DIN 1/8		-	-	+	-	-	-	+	-	+	-	-	+	-	-	-
96x96mm DIN 1/4		-	-	-	+	-	-	-	+	-	-	-	-	+	-	-

:Emko Elektronik A.Ş. DOSAB Karanfil St. No:6 TR 16369 Bursa / TURKEY
: +90 224 261 19 00 - :+90 224 261 19 12
: www.emkoelektronik.com.tr